varisco®

solid pumping solutions

75

1932 - 2007

0810 Rev. 01

SUBMERSIBLE DRAINAGE PUMPS

D

Company Presentation

Varisco S.p.A. has a clear mission: to manufacture and market pumps for use in industry, civil engineering and safety applications.
Incorporated in 1932, the Company started manufacturing pumps in 1948.
The Varisco brand has become a synonym all over the world for top quality pump design and construction.
Varisco provides comprehensive customer service both before and after sales, operating from the company headquarters and through an extensive sales and service network.

SUBMERSIBLE DRAINAGE PUMPS

STAINLESS STEEL

TITAN 2X

SUBMERSIBLE DRAINAGE PUMPS

ALUMINIUM

TITAN 2A

SUBMERSIBLE DRAINAGE PUMPS

CAST IRON

TITAN 2G
TITAN 4G

PRODUCTS

SUBMERSIBLE DRAINAGE PUMPS
STAINLESS STEEL
TITAN 2X

TITAN 2X	DNM 1”	25 mm	2900 rpm	pag.	24

SUBMERSIBLE DRAINAGE PUMPS
ALUMINIUM
TITAN 2A

TITAN 2AL	DNM 2”	50 mm	2900 rpm	pag.	26
	DNM 3”	75 mm	2900 rpm	pag.	28
	DNM 6”	150 mm	2900 rpm	pag.	30
TITAN 2AM	DNM 2”	50 mm	2900 rpm	pag.	32
	DNM 3”	75 mm	2900 rpm	pag.	33
	DNM 4”	100 mm	2900 rpm	pag.	35
	DNM 6”	150 mm	2900 rpm	pag.	37
TITAN 2AH	DNM 3”	75 mm	2900 rpm	pag.	38
	DNM 4”	100 mm	2900 rpm	pag.	40

PRODUCTS

SUBMERSIBLE DRAINAGE PUMPS

CAST IRON

TITAN 2G
TITAN 4G

TITAN 2GL

TITAN 2GM

TITAN 2GH

TITAN 4GL

TITAN 4GA

TABLE OF CONTENTS

COMPANY REFERENCES

ITALY

INDUSTRY

ALCOA TRASFORMAZIONI S.R.L.
ALENIA AERONAVALI S.P.A.
AVENTIS PHARMA SPA
BASF CC ITALIA SPA
BONDIOLI & PAVESI SPA
CANTIERE NAVALE DI PESARO SPA
CARTIERE PAOLO PIGNA SPA
COLGATE PALMOLIVE ITALIA S.R.L.
DOW ITALIA SRL
EUROPOLIMERI SPA
FINCANTIERI CANT.NAV.ITALIANI SPA
FREUDENBERG POLITEX SRL
HEINEKEN ITALIA S.P.A.
ILVA SPA
INFINEUM ITALIA SRL
ITALIA ZUCCHERI SPA
POLIMERI EUROPA S.P.A.
RAFFINERIA DI GELA SRL
RAVASINI
ROHM AND HAAS ITALIA S.R.L.
SAINT GOBAIN WEBER SPA
SIEMENS S.P.A.
SOLVAY CHIMICA ITALIA SPA
THYSSENKRUPP ACCIAI SP.TERNI S.P.A.
ZIGNAGO VETRO S.P.A.

PUBLIC INSTITUTIONS

MINISTRY OF DEFENCE
INTERIOR MINISTRY
PROVINCIAL FIRE DEPARTMENTS
CIVIL DEFENCE CORPS DEP.
HARBOUR OFFICES
LAND RECLAMATION CONSORTIA
REGIONAL, PROVINCIAL AND MUNICIPAL AUTHORITIES

CIVIL ENGINEERING

ENEL PRODUZIONE SPA
ENI S.P.A. DIV.REFINING & MARKETING
ENIPOWER S.P.A.
FOSTER WHEELER ITALIANA SPA
SAIPEM S.P.A.
SNAM RETE GAS SPA
SNAMPROGETTI S.P.A.
TECHINT CIMIMONTUBI SPA
TECNIMONT S.P.A.
ASTALDI SPA
BTP SPA BALDASSINI TOGNOZZI
C.M.B.SOCIETA' COOPERATIVA
CASAGRANDE
COOPERATIVA MURATORI E CEMENTISTI
COOPSETTE S.C.A.R.L.
GHELLA SPA
IMP. PIZZAROTTI & C. S.P.A.
IMPR. SALVATORE MATARRESA SPA
ING. MANTOVANI SPA
MATTIOLI SPA
S.E.L.I. SPA
SALINI COSTRUTTORI
TODINI SPA
TOTO SPA
TREVI SPA

INTERNATIONAL

CIVIL WORKS COMPANY	SAUDI ARABIA
AUSTRALIAN SUBMARINE CORP.	AUSTRALIA
GESER	BURKINA FASO
TOYOTA	CANADA
SHELL BITUMEN	CHILE
SHANGHAI WATER WORKS AUTHORITY	CHINA
UNICEF SUPPLY DIVISION	DENMARK
MOBIL OIL	EGYPT
ALEXANDRIA PETROLEUM CO.	EGYPT
DUBAI MUNICIPALITY	UNITED ARAB EMIRATES
MARINE TRANSPORT AUTHORITY	ETHIOPIA
ETHIOPIA SUGAR INDUSTRY SUPPORT	ETHIOPIA
KIMBERLY CLARK	PHILIPPINES
ELF – TOTAL	FRANCE
SUN CHEMICAL	GERMANY
BAYER	GERMANY
IRANIAN OFFSHORE OIL CO.	IRAN
NIGC (NATIONAL IRANIAN GAS CO.)	IRAN
BAGHDAD MUNICIPALITY	IRAQ
THE GENERAL CO. FOR WATER AND WASTEWATER	LIBYA
COGEFAR-IMPRESIT COSTR. GENERALI	MOROCCO
PAK ARAB REFINERY	PAKISTAN
SALINE WATER CONVERSION CORPORATION	SAUDI ARABIA
NATIONAL WATER SUPPLY & DRAINAGE BOARD	SRI LANKA
CIBA- GEIGY	SWITZERLAND
FLUID POWER CO. LIMITED	TAIWAN
ISKI	TURKEY
US ARMY CORPS OF ENGINEERS	USA
DAIMLER CHRYSLER	USA
GROUPE YOSHAD	ZAIRE

APPLICATIONS

Submersible pumps in the TITAN series, designed to pump water containing mud, sand, clay and other abrasive materials, are used in the following sectors:

- civil engineering
- industrial
- agricultural
- naval
- waste treatment
- emergency

Civil engineering

- building construction sites
- drainage of foundation excavations and tunnels
- drainage of canals, ponds, open excavations and basements
- transfer of water contaminated with suspended solids, cleaning of road drains, sewerage system bypasses
- reclamation of contaminated sites
- mines

Industry - Agriculture - Naval – Waste Treatment - Civil

- transfer of clear, turbid, sandy and muddy liquids
- flood irrigation
- oxygenation
- transfer, bilge bailing
- emptying of drains and circulation
- treatment of wastewater, including polluted, hot, sandy and muddy water

Emergency

- transfer of clear, turbid, sandy and muddy liquids
- transfer of floodwaters
- drainage of flooded areas and basements
- supply of water for fire trucks
- emergency firefighting duties

PUMP CONSTRUCTION FEATURES

TITAN 2XL

Submersible electric pump with dual external chamber for optimal motor cooling also with low suction levels. Pump body and impeller in GJL-200 cast iron. Outer jacket and motor casing in AISI 304 stainless steel. Motor shaft in AISI 410 stainless steel. Suction base in NBR rubber, vertical discharge port in AISI 304 stainless steel.
Motor with IP68 protection rating. Standard thermal protection device: internal thermal cutout.
Double mechanical oil bath seal. Primary seal in silicon carbide, secondary seal in ceramic - graphite.
Bearings prelubricated with grease.
Maximum head: 11 m w.c.
Connections: 1” (25 mm)
Maximum immersion depth: 5 m
Minimum suction level: 2 mm
Liquid temperature: 0 °C +40 °C

TITAN 2AL - 2AM - 2AH

Submersible electric pump with dual external chamber for optimal motor cooling also with low suction levels. Cast iron body external jacket and motor casing in AISI 304 stainless steel. Motor shaft in AISI 420 stainless steel. Impeller in hard chrome cast iron (2AM-2AH versions) or in high-chrome hardened steel (2AL versions) for high abrasion resistance (hardness 60 HRC). Wear parts in NBR rubber.
Motor protection rating IP68. Integral contactor on direct starting models. Thermal protection supplied as standard with bimetal microswitch on each phase.
Double mechanical seal with interposed oil chamber. Primary seal in silicon carbide, secondary seal in stainless steel - graphite.
Bearings prelubricated with grease.
Maximum head: 73 m w.c.
Connections: 2” ÷ 6” (50 mm ÷ 150 mm)
Maximum immersion depth: 20 m
Liquid temperature: 0 °C +40 °C

TITAN 2GL - 2GM - 2GH - 4GL

Submersible electric pump with dual external chamber for optimal motor cooling also with low suction levels. Motor body and impeller in GJL-200 cast iron. Motor shaft in AISI 410 stainless steel. Outer jacket in GJL-200 cast iron and open impeller (versions 2GL-4GL). Outer jacket in steel and closed impeller (versions 2GM- 2GH). Motor with IP68 protection rating. Standard thermal protection device: internal thermal cutout up to 5.5 kW, bimetal sensor from 7.5 kW.
Triple mechanical oil bath seal with inspectable chamber. Primary and secondary seal in silicon carbide plus lip seal for total protection of the motor. Seal leak protection with electrode as from 11 kW.
Bearings prelubricated with grease.
Maximum head: 155 m w.c.
Connections: 2” ÷ 10” (50 mm ÷ 250 mm)
Maximum immersion depth: 20 m
Liquid temperature: 0 °C +40 °C

TITAN 4GA

Submersible electric pump with steel outer jacket. Open impeller. Wear plate, agitator, and impeller in high chrome hardened steel to ensure high abrasion protection. Motor shaft in AISI 410 stainless steel.
Motor with IP68 protection rating. Standard thermal protection device: internal thermal cutout up to 5.5 kW, bimetal sensor from 7.5 kW.
Triple mechanical oil bath seal with inspectable chamber. Primary and secondary seal in silicon carbide plus lip seal for total protection of the motor. Seal leak protection with electrode as from 11 kW.
Bearings prelubricated with grease.
Maximum pressure head: 38 m w.c.
Connections: 3” ÷ 10” (80 mm ÷ 250 mm)
Maximum immersion depth: 20 m
Liquid temperature: 0 °C +40 °C

SECTIONAL DRAWINGS AND COMPONENTS TABLES

TITAN 2XL
Stainless steel

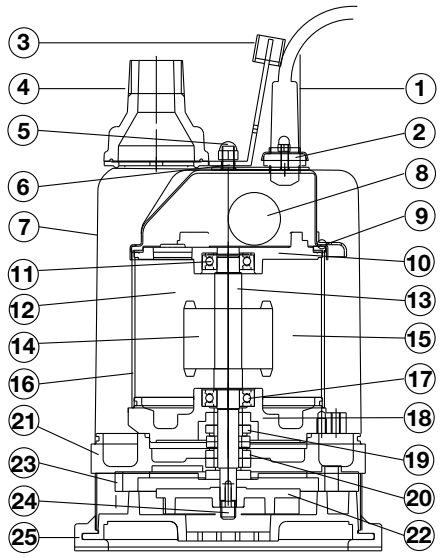

N°	Part	Material
1	Power cable	Neoprene
2	Cable gland	AISI 304 stainless steel
3	Outer casing handle	AISI 304 stainless steel + NBR
4	Discharge fitting	AISI 304 stainless steel
5	Cap nut	AISI 304 stainless steel
6	Threaded pin	AISI 304 stainless steel
7	Pump casing	AISI 304 stainless steel
8	Capacitor	-
9	Top seal	NBR
10	Top seal seat	GJL-200 cast iron
11	Top bearing	Steel
12	Thermal protection	-
13	Rotor shaft	AISI 410 stainless steel
14	Rotor	-
15	Stator	-
16	Motor casing	AISI 304 stainless steel
17	Thrust bearing	Steel
18	Bottom bearing seat	GJL-200 cast iron
19	Secondary mechanical seal	Ceramic-Graphite
20	Primary mechanical seal	Silicon carbide
21	Seal carrier plate	GJL-200 cast iron
22	Impeller	GJL-200 cast iron
23	Diffuser	GJL-200 cast iron
24	Impeller nut	AISI 304 stainless steel
25	Base	NBR

TITAN 2AL - 2AM - 2AH
Aluminium

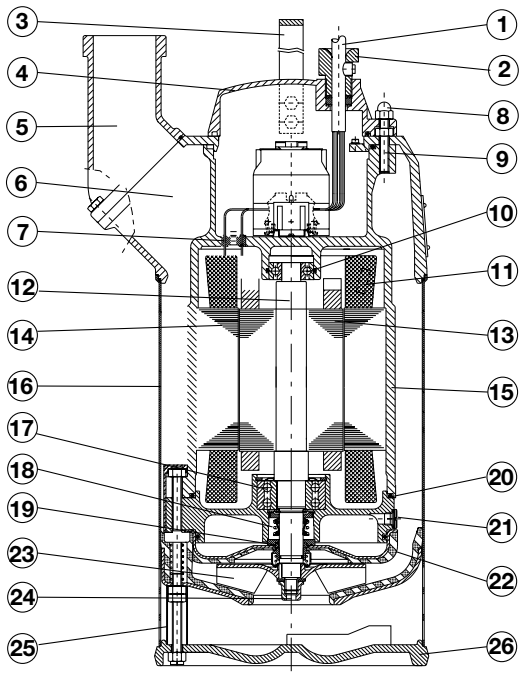

N°	Part	Material
1	Power cable	Neoprene
2	Cable gland	AISI 304 stainless steel
3	Outer casing handle	AISI 304 stainless steel
4	Cover	Aluminium
5	Discharge fitting	Aluminium
6	Pump casing	Aluminium
7	Motor casing cable seal	-
8	Cap nut	AISI 304 stainless steel
9	Threaded pin	AISI 304 stainless steel
10	Top bearing	Steel
11	Thermal protection	-
12	Rotor shaft	AISI 420 stainless steel
13	Rotor	-
14	Stator	-
15	Motor casing	Aluminium
16	Outer jacket	AISI 304 stainless steel
17	Thrust bearing	Steel
18	Secondary mechanical seal	Steel-Graphite
19	Primary mechanical seal	Silicon carbide
20	O-Ring	Rubber
21	Oil level plug	AISI 304 stainless steel
22	Wear plate	Aluminium + NBR
23	Impeller	Cast iron / Hard chrome plated steel
24	Impeller nut	AISI 304 stainless steel
25	Rubber sheath	NBR rubber
26	Diffuser	Aluminium + NBR

SECTIONAL DRAWINGS AND COMPONENTS TABLES

TITAN 2GL
Cast iron

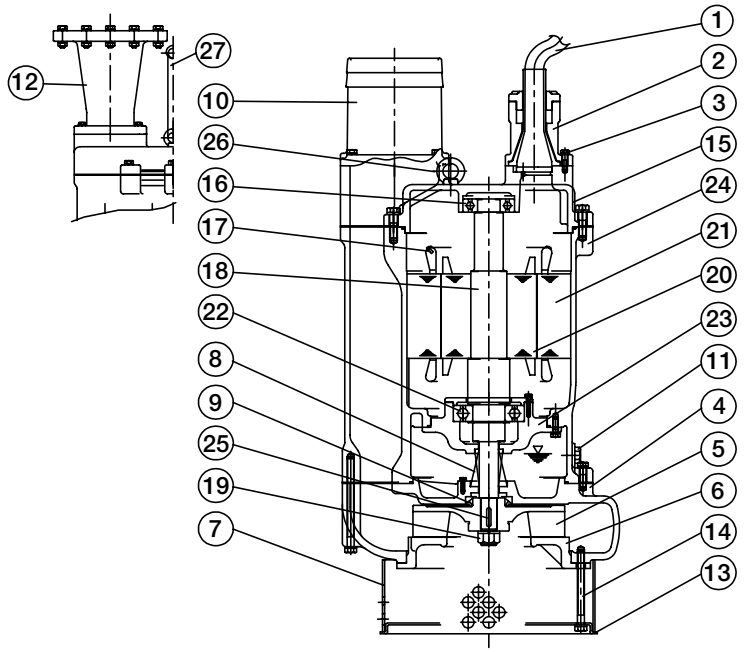

N°	Part	Material
1	Power cable	Neoprene
2	Cable gland	GJL-200 cast iron
3	Screw	AISI 304 stainless steel
4	Pump casing	GJL-200 cast iron
5	Impeller	GJL-200 cast iron
6	Suction cover	GJL-200 cast iron
7	Strainer	Steel
8	Mechanical seal	Silicon carbide
9	Oil seal	NBR rubber
10	Connection port	GJL-200 cast iron
11	Oil level plug	AISI 304 stainless steel
12	Discharge flange	GJL-200 cast iron
13	Bottom plate	Steel
14	Screw	AISI 304 stainless steel
15	Motor flange	GJL-200 cast iron
16	Top bearing	Steel
17	Thermal protection	-
18	Rotor shaft	AISI 410 stainless steel
19	Nut	AISI 304 stainless steel
20	Rotor	-
21	Stator	-
22	Thrust bearing	Steel
23	Thrust bearing seat	GJL-200 cast iron
24	Motor casing	GJL-200 cast iron
25	Key	AISI 304 stainless steel
26	Eyebolt	AISI 304 stainless steel
27	Lifting ring	Steel

TITAN 2GM
Cast iron

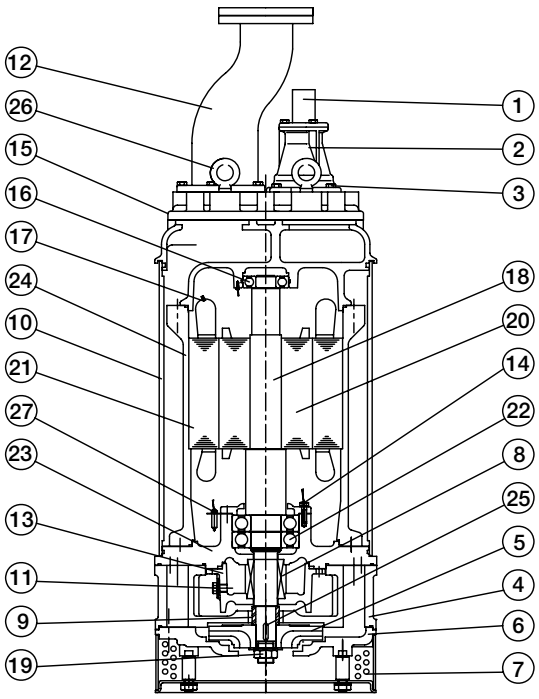

N°	Part	Material
1	Power cable	Neoprene
2	Cable gland	GJL-200 cast iron
3	Screw	AISI 304 stainless steel
4	Pump casing	GJL-200 cast iron
5	Impeller	GJL-200 cast iron
6	Suction cover	GJL-200 cast iron
7	Strainer	Steel
8	Mechanical seal	Silicon carbide
9	Oil seal	NBR rubber
10	Outer jacket	Steel
11	Oil level plug	AISI 304 stainless steel
12	Discharge flange	GJL-200 cast iron
13	Bottom plate	Steel
14	Screw	AISI 304 stainless steel
15	Motor flange	GJL-200 cast iron
16	Top bearing	Steel
17	Thermal protection	-
18	Rotor shaft	AISI 410 stainless steel
19	Nut	AISI 304 stainless steel
20	Rotor	-
21	Stator	-
22	Thrust bearing	Steel
23	Thrust bearing seat	GJL-200 cast iron
24	Motor casing	GJL-200 cast iron
25	Key	AISI 304 stainless steel
26	Eyebolt	AISI 304 stainless steel
27	Seal sensor	-

SECTIONAL DRAWINGS AND COMPONENTS TABLES

TITAN 2GH
Cast iron

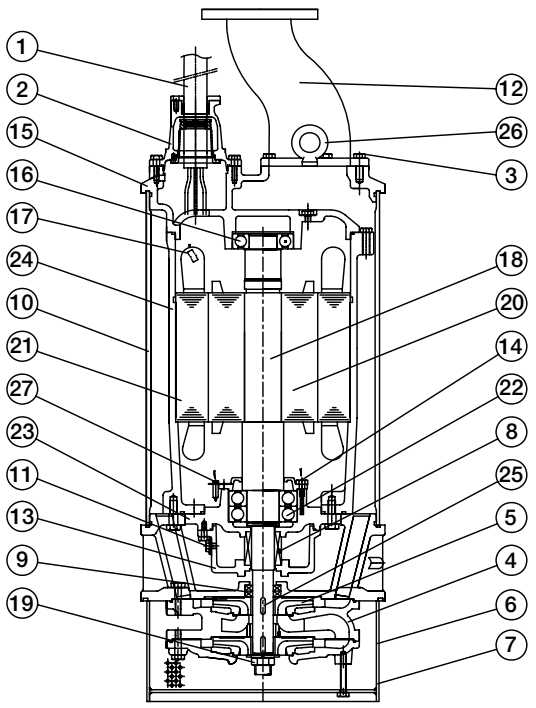

N°	Part	Material
1	Power cable	Neoprene
2	Cable gland	GJL-200 cast iron
3	Screw	AISI 304 stainless steel
4	Pump casing	GJL-200 cast iron
5	Impeller	GJL-200 cast iron
6	Suction cover	GJL-200 cast iron
7	Strainer	Steel
8	Mechanical seal	Silicon carbide
9	Oil seal	NBR rubber
10	Outer jacket	Steel
11	Oil level plug	AISI 304 stainless steel
12	Discharge flange	GJL-200 cast iron
13	Bottom plate	Steel
14	Screw	AISI 304 stainless steel
15	Motor flange	GJL-200 cast iron
16	Top bearing	Steel
17	Thermal protection	-
18	Rotor shaft	AISI 410 stainless steel
19	Nut	AISI 304 stainless steel
20	Rotor	-
21	Stator	-
22	Thrust bearing	Steel
23	Thrust bearing seat	GJL-200 cast iron
24	Motor casing	GJL-200 cast iron
25	Key	AISI 304 stainless steel
26	Eyebolt	AISI 304 stainless steel
27	Seal sensor	-

SECTIONAL DRAWINGS AND COMPONENTS TABLES

TITAN 4GL
Cast iron

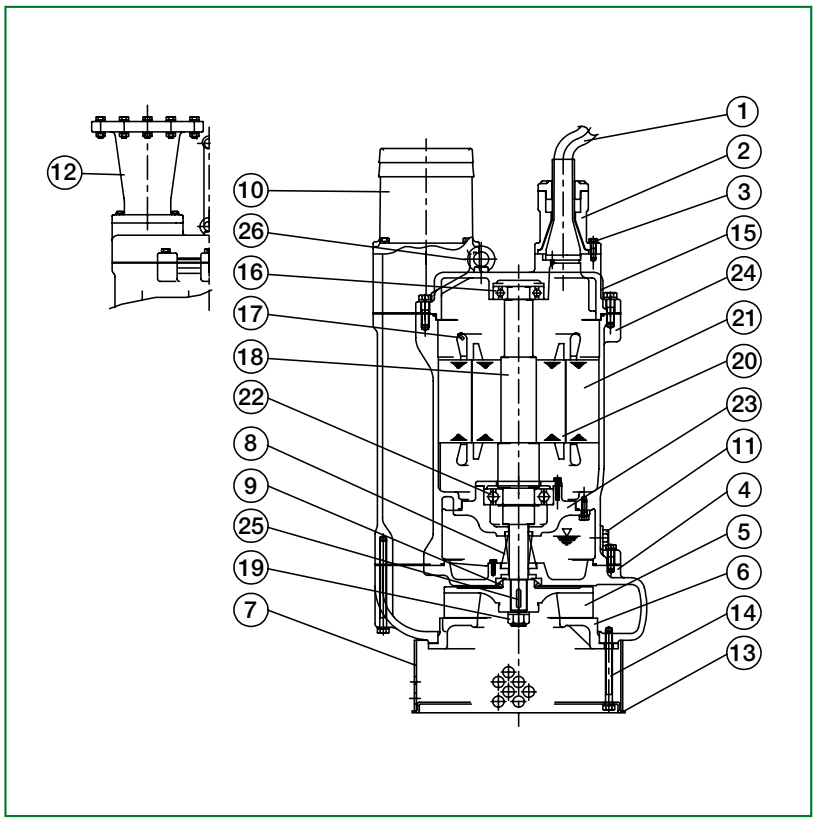

N°	Part	Material
1	Power cable	Neoprene
2	Cable gland	GJL-200 cast iron
3	Screw	AISI 304 stainless steel
4	Pump casing	GJL-200 cast iron
5	Impeller	GJL-200 cast iron
6	Suction cover	GJL-200 cast iron
7	Strainer	Steel
8	Mechanical seal	Silicon carbide
9	Oil seal	NBR rubber
10	Connection port	GJL-200 cast iron
11	Oil level plug	AISI 304 stainless steel
12	Discharge flange	GJL-200 cast iron
13	Bottom plate	Steel
14	Screw	AISI 304 stainless steel
15	Motor flange	GJL-200 cast iron
16	Top bearing	Steel
17	Thermal protection	-
18	Rotor shaft	AISI 410 stainless steel
19	Nut	AISI 304 stainless steel
20	Rotor	-
21	Stator	-
22	Thrust bearing	Steel
23	Thrust bearing seat	GJL-200 cast iron
24	Motor casing	GJL-200 cast iron
25	Key	AISI 304 stainless steel
26	Eyebolt	AISI 304 stainless steel

TITAN 4GA
Cast iron

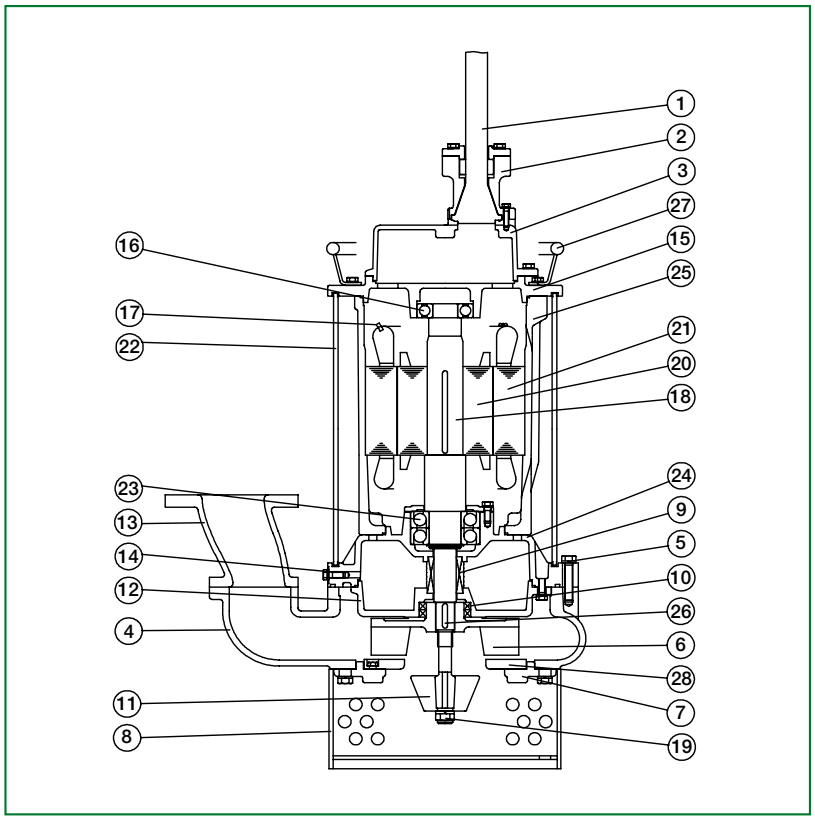

N°	Particolare	Materiale
1	Power cable	Neoprene
2	Cable gland	GJL-200 cast iron
3	Cover	GJL-200 cast iron
4	Pump casing	GJL-200 cast iron
5	Screw	AISI 304 stainless steel
6	Impeller	Chrome Steel
7	Suction cover	GJL-200 cast iron
8	Strainer	Steel
9	Mechanical seal	Silicon carbide
10	Oil seal	NBR rubber
11	Agitator	Chrome Steel
12	Seal chamber (lower)	GJL-200 cast iron
13	Discharge flange	GJL-200 cast iron
14	Oil plug	AISI 304 stainless steel
15	Motor flange	GJL-200 cast iron
16	Top bearing	Steel
17	Thermal protection	-
18	Rotor shaft	AISI 410 stainless steel
19	Nut	AISI 304 stainless steel
20	Rotor	-
21	Stator	-
22	Outer casing	Steel
23	Thrust bearing	Steel
24	Thrust bearing seat	GJL-200 cast iron
25	Motor casing	GJL-200 cast iron
26	Key	AISI 304 stainless steel
27	Lifting ring	Steel
28	Wear plate	Chrome Steel

ELECTRIC MOTOR CONSTRUCTION CHARACTERISTICS

The pumps are driven by TEFC single-phase and three-phase squirrel cage asynchronous motors with 2-4 poles and steel rotor shaft.

Voltage:	Single phase 230 V	up to 1.9 kW (capacitor start and run design)
	Three-phase 400 V	from 1.25 kW
Frequency:	50 Hz	
No. of Poles:	Single phase 2 poles 2900 rpm (nominal)	
	Three-phase 2 poles 2900 rpm (nominal)	
	Three-phase 4 poles 1450 rpm (nominal)	
Insulation class:	F	
Protection rating:	IP 68	
Type of duty:	continuous - S1	
Thermal protection:	the motors are equipped as standard with integral thermal and current protection	
Paint finish:	RAL 1018 yellow (Standard)	
Ambient temperature:	40 C° max.	
European Council directives applicable:	- Electromagnetic compatibility Directive 89/336/EEC - Low Voltage Directive 2006/95/EC - Machinery Directive 89/392/EEC	
Alternative voltages and frequencies:	available on request	

TÜV UKQA

Certificate of Approval

This is to certify that

VARISCO S.p.a.

has been assessed by TÜV UK Quality Assurance Limited and
that the system seen conforms to the requirements of

ISO 9001:2000

As detailed in the scope below:

Design, manufacture, sales and service of pump units and firefighting units.

Certificate No: *I000690*

First Issue: *13/11/2003*

Current Issue: *10/01/2007*

Valid Until: *18/10/2009*

UKAS
QUALITY
MANAGEMENT
065

Signed for and on behalf of

TÜV UK Quality Assurance Limited

Management Representative

This Certificate, which is the property of TÜV Quality Assurance Limited, is issued subject to the Regulations of TÜV UK Quality Assurance Limited as amended from time to time.

TÜV UK Quality Assurance Ltd, Surrey House, Surrey Street, Croydon CR9 1XZ
The use of the Accreditation Mark indicates accreditation in respect of those covered by the accreditation Certificate No. 065A

varisco
solid pumping solutions

DICHIARAZIONE DI CONFORMITA'

DIRETTIVE 98/37/CEE – 2006/95/CE – 89/336/CEE

DECLARATION OF CONFORMITY
DIRECTIVES 98/37/CEE – 2006/95/CE – 89/336/CEE

In accordo a / ***In accordance with***
UNI EN 10204 tipo 2.1

Dichiarazione di conformità CE N°01

Noi firmatari della presente dichiariamo che l'Unità di Pompaggio
We hereby declare that the pump unit described below

TIPO/*TYPE*	
N° CODICE/*CODE N°*	
N° MATRICOLA/ *SERIAL NUMBER*	

è conforme a quanto stabilito dai requisiti della Direttiva 98/37/CEE.
complies with the requirements of the 98/37/CEE Directive.

Gli equipaggiamenti elettrici sono conformi a quanto stabilito dai requisiti della Direttiva 2006/95/CE.
The electric equipment complies with the requirements of the 2006/95/CE Directive.

L'unità di pompaggio è conforme ai requisiti della Direttiva 89/336/CEE e successivi emendamenti 92/31/CEE e 93/68/CEE.
The pump unit complies with the requirements of the CEE 89/336 Directive and subsequent amendments 92/31/CEE and 93/68/CEE.

Transparent quality

Varisco has decided to make **transparent its quality**, which means to clearly show that all its pumps have been tested, a sales and technical added value that only a few of our competitors are able to offer.

All Varisco pumps are shipped with this label showing that they have passed a running test.

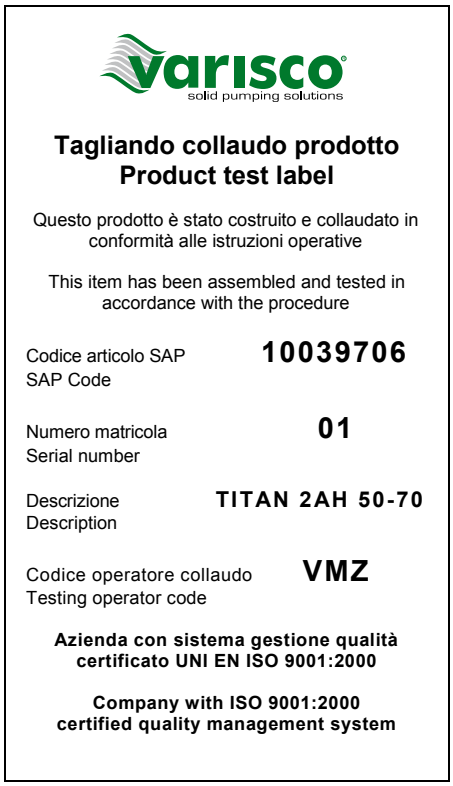
varisco
solid pumping solutions

Tagliando collaudo prodotto
Product test label

Questo prodotto è stato costruito e collaudato in conformità alle istruzioni operative

This item has been assembled and tested in accordance with the procedure

Codice articolo SAP SAP Code	**10039706**
Numero matricola Serial number	**01**
Descrizione Description	**TITAN 2AH 50-70**
Codice operatore collaudo Testing operator code	**VMZ**

Azienda con sistema gestione qualità certificato UNI EN ISO 9001:2000

Company with ISO 9001:2000 certified quality management system

Varisco records and archives the data of each tested pump and, if a problem occurrs, all the information about the pump's production and test are immediately available.
These are precious data for statistical analisys on faultiness that, as a result, gives a better product control and the guarantee of an ongoing quality.

PRODUCT IDENTIFICATION

Example: **TITAN 2GH 55-70**

TITAN	2	G	H	55	70

- **70** → Maximum head [m w.c.]
- **55** → Maximum flow rate [m^3/h]
- **H** →
  - L = Low — low head
  - M = Medium — medium head
  - H = High — high head
  - A = Agitator
- **G** →
  - A = Aluminium
  - G = Cast iron
  - X = Stainless steel
- **2** →
  - 2 = 2-pole motor - 2900 rpm (nominal)
  - 4 = 4-pole motor - 1450 rpm (nominal)
- **TITAN** → Submersible drainage pump



METALLURGY

A	Construction of liquid contact parts in aluminium alloy
G	Construction of liquid contact parts in GJL-200 cast iron (EN 1691).
X	Construction of liquid contact parts, internal and external threaded fasteners in AISI 304 stainless steel.

TITAN - PRODUCT PROGRAMME 2900 rpm

Code	Type	Size	Solids	P_{2n}	Frequency	N° rated	Cable length	Weight
		[mm]	[mm]	[kW]	[Hz]	[rpm]	[m]	[kg]
10030720	TITAN 2XL 10-11	25	2	0,37	50	2850	5	16
10039689	TITAN 2AL 30-15	50	6,5 x 15,5	0,9	50	2850	20	16
10039690	TITAN 2AL 30-15A	50	6,5 x 15,5	0,9	50	2850	20	16
10039691	TITAN 2AL 30-17	50	6,5 x 15,5	1,0	50	2850	20	16
10039692	TITAN 2AL 30-17A	50	6,5 x 15,5	1,0	50	2850	20	16
10039693	TITAN 2AL 40-18	50	6,5 x 15,5	1,4	50	2850	20	18
10039694	TITAN 2AL 40-18A	50	6,5 x 15,5	1,4	50	2850	20	18
10039695	TITAN 2AL 40-19	50	6,5 x 15,5	1,4	50	2850	20	17
10039696	TITAN 2AL 40-19A	50	6,5 x 15,5	1,4	50	2850	20	17
10039697	TITAN 2AL 70-18	75	7,5 x 16,5	2,3	50	2850	20	27
10039699	TITAN 2AL 60-20	75	8 x 33	3	50	2850	20	31
10039704	TITAN 2AL 200-20	150	7,5 x 16,5	5,8	50	2850	20	50
10039707	TITAN 2AL 240-25	150	7,5 x 16,5	9,4	50	2850	20	70
10039700	TITAN 2AM 30-35	50	8 x 33	3	50	2850	20	31
10039698	TITAN 2AM 50-25	75	7,5 x 16,5	2,3	50	2850	20	27
10039701	TITAN 2AM 90-25	75	7,5 x 16,5	4,2	50	2850	20	36
10039702	TITAN 2AM 130-30	100	7,5 x 16,5	5,8	50	2850	20	50
10039705	TITAN 2AM 150-45	100	7,5 x 16,5	9,4	50	2850	20	70
10039708	TITAN 2AM 360-30	150	8 x 34	21	50	2850	20	155
10039703	TITAN 2AH 70-45	75	7,5 x 16,5	5,8	50	2850	20	50
10039706	TITAN 2AH 50-70	75	7,5 x 16,5	9,4	50	2850	20	75
10039709	TITAN 2AH 130-75	100	8 x 34	21	50	2850	20	155
10030933	TITAN 2GL 25-24	50	10	1,5	50	2850	20	44
10030934	TITAN 2GL 35-28	50	15	2,2	50	2850	20	50
10030935	TITAN 2GL 40-16	80	10	1,5	50	2850	20	44
10030936	TITAN 2GL 50-20	80	15	2,2	50	2850	20	50
10030938	TITAN 2GL 60-31	80	15	3,7	50	2850	20	70
10030939	TITAN 2GL 70-38	80	20	5,5	50	2850	20	83
10030940	TITAN 2GL 80-22	100	15	3,7	50	2850	20	70
10030941	TITAN 2GL 95-25	100	20	5,5	50	2850	20	83
10030942	TITAN 2GL 90-45	100	20	7,5	50	2850	20	150
10030943	TITAN 2GL 105-52	100	25	11	50	2850	20	177
10030945	TITAN 2GL 150-26	150	20	7,5	50	2850	20	150
10030946	TITAN 2GL 155-38	150	25	11	50	2850	20	177
10030967	TITAN 2GM 145-67	100	10	22	50	2850	20	500
10032481	TITAN 2GM 180-62	150	15	22	50	2850	20	500
10030968	TITAN 2GM 155-77	150	10	30	50	2850	20	530
10032482	TITAN 2GM 155-83	150	15	37	50	2850	20	770
10032483	TITAN 2GM 195-92	150	15	45	50	2850	20	800
10032484	TITAN 2GM 270-58	200	30	37	50	2850	20	770
10032485	TITAN 2GM 330-60	200	30	45	50	2850	20	800
10032477	TITAN 2GH 30-40	50	10	3,7	50	2850	20	150
10030969	TITAN 2GH 40-55	50	10	5,5	50	2850	20	150
10032478	TITAN 2GH 55-70	80	15	11	50	2850	20	235
10032479	TITAN 2GH 100-120	100	15	30	50	2850	20	560
10032480	TITAN 2GH 130-155	150	20	55	50	2850	20	850

TITAN - PRODUCT PROGRAMME 1450 rpm

Code	Type	Size	Solids	P_{2n}	Frequency	N° rated	Cable length	Weight
		[mm]	[mm]	[kW]	[Hz]	[rpm]	[m]	[kg]
10030947	TITAN 4GL 55-15	80	15	2,2	50	1450	20	110
10030948	TITAN 4GL 80-20	80	15	3,7	50	1450	20	120
10030949	TITAN 4GL 130-19	100	25	5,5	50	1450	20	135
10030950	TITAN 4GL 155-18	150	25	7,5	50	1450	20	210
10030951	TITAN 4GL 190-20	150	25	11	50	1450	20	220
10030952	TITAN 4GL 225-26	150	25	15	50	1450	20	245
10030954	TITAN 4GL 320-27	200	30	19	50	1450	20	420
10030955	TITAN 4GL 320-32	200	30	22	50	1450	20	450
10030956	TITAN 4GL 380-35	200	30	30	50	1450	20	480
10030958	TITAN 4GA 80-14	80	30	3,7	50	1450	20	120
10030959	TITAN 4GA 110-16	100	40	5,5	50	1450	20	150
10032991	TITAN 4GA 130-18	100	40	7,5	50	1450	20	175
10032992	TITAN 4GA 160-20	150	50	11	50	1450	20	200
10032993	TITAN 4GA 190-24	150	50	15	50	1450	20	230
10032994	TITAN 4GA 255-28	200	50	19	50	1450	20	580
10032995	TITAN 4GA 410-40	250	75	45	50	1450	20	930

TITAN - HYDRAULIC PERFORMANCE RANGE

2900 rpm

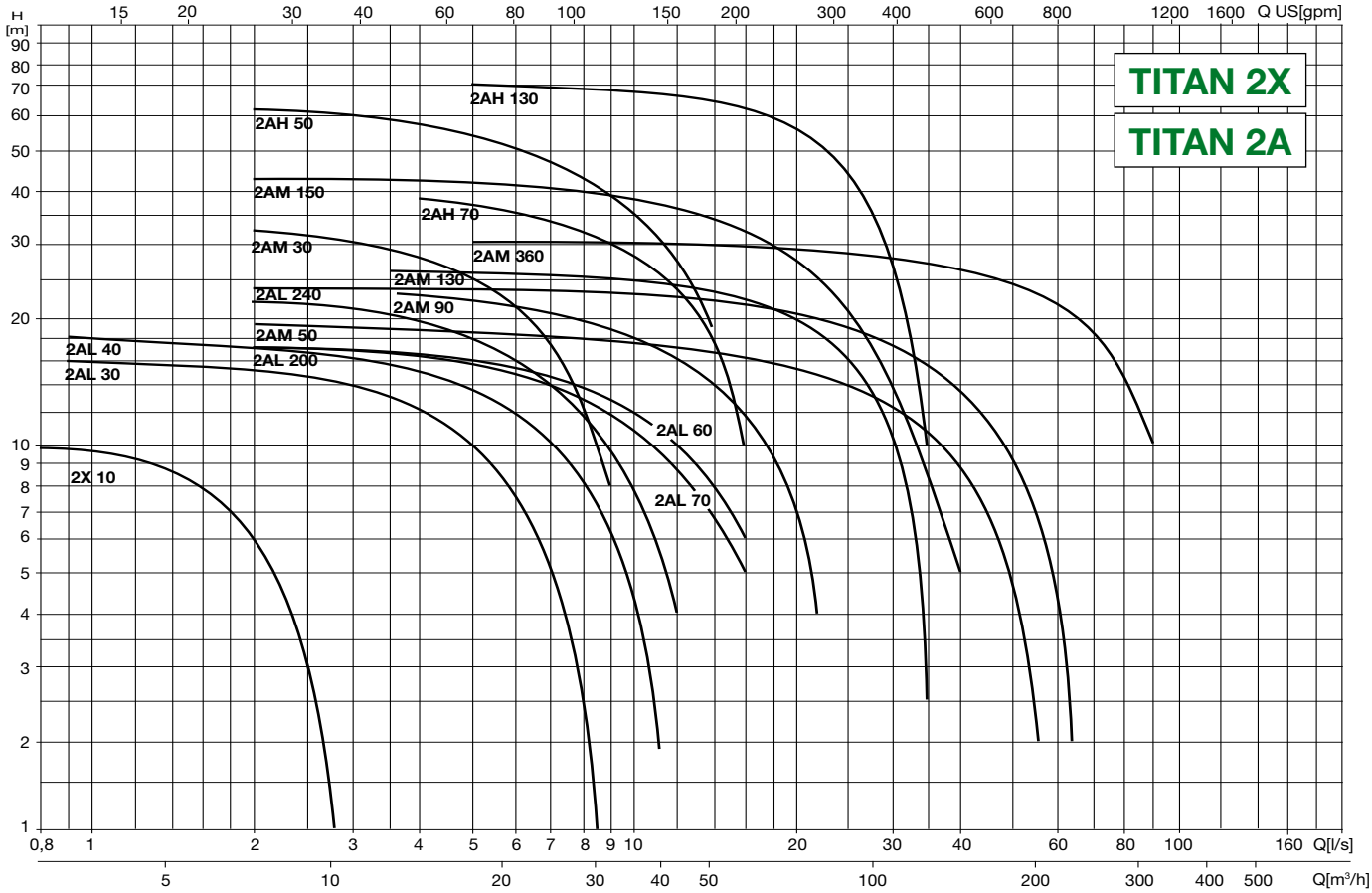

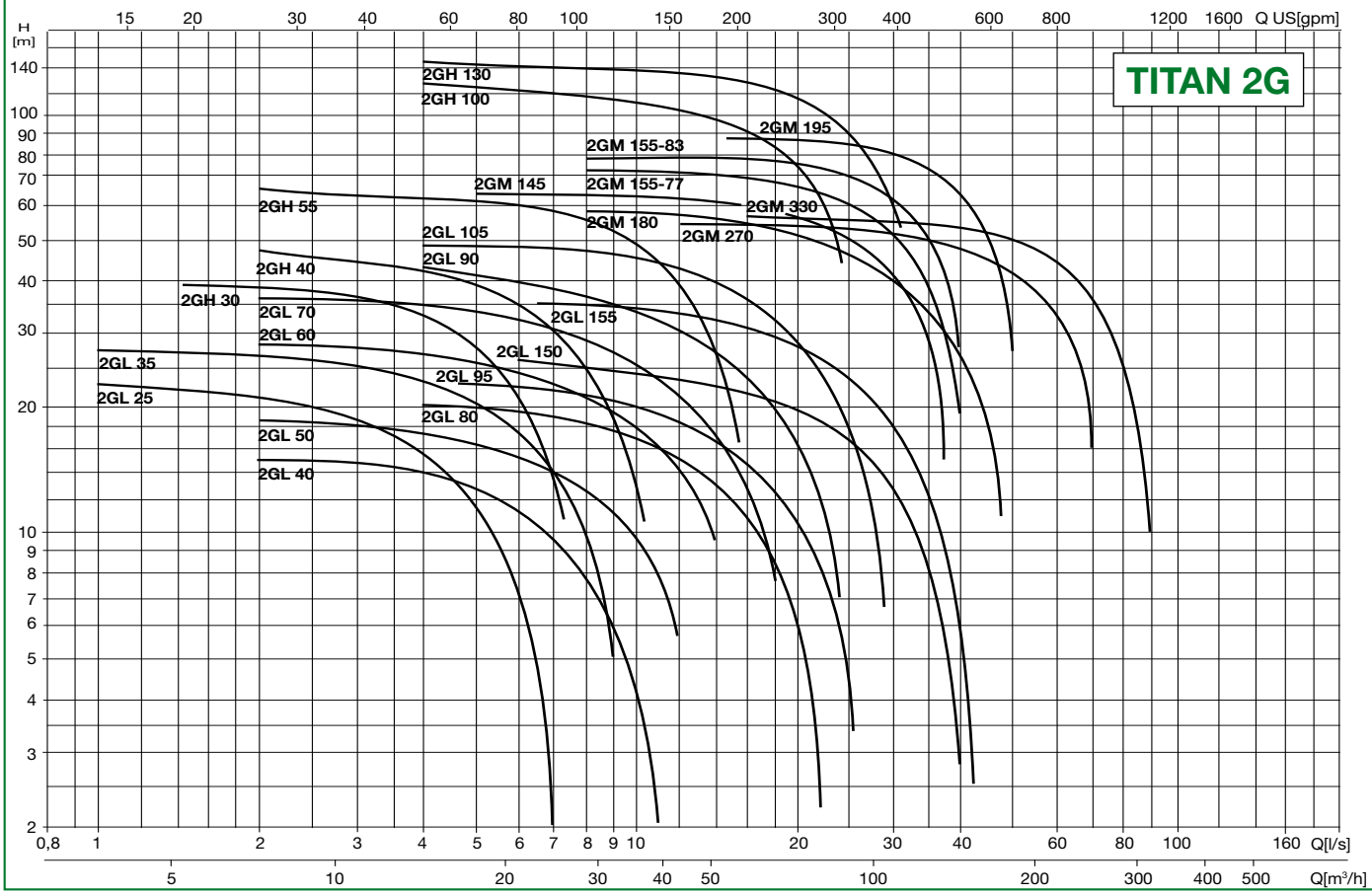

TITAN - RAPID SELECTION TABLE

2900 rpm

Type	Capacity																						
	l/s	0	1	2	3	4	5	6	8	10	12	14	16	20	24	28	32	40	50	60	70	80	90
	m³/h	0	3,6	7	11	14	18	22	29	36	43	50	58	72	86	101	115	144	180	216	252	288	324
TITAN 2XL 10-11		11,1	9,5	6,6																			
TITAN 2AL 30-15		15	14	13	11,5	10	8	6	1,5														
TITAN 2AL 30-15A		15	14	13	11,5	10	8	6	1,5														
TITAN 2AL 30-17		17	16	15	13	12	10	7,5	2,5														
TITAN 2AL 30-17A		17	16	15	13	12	10	7,5	2,5														
TITAN 2AL 40-18		18,5	18	17	16	14,5	13	11	7,5	3													
TITAN 2AL 40-18A		18,5	18	17	16	14,5	13	11	7,5	3													
TITAN 2AL 40-19		19	18	18	16	15	14	12	8	4													
TITAN 2AL 40-19A		19	18	18	16	15	14	12	8	4													
TITAN 2AL 70-18		18		17	16,5	16	15,5	14,5	13	11	9	7	5										
TITAN 2AL 60-20		18		17	16,5	16	15,5	14,5	13	12	10	8	6										
TITAN 2AL 200-20		20						18,5	18	17,8	17,2	16,8	16	15,2	14	13	11,5	9	5				
TITAN 2AL 240-25		25						24	23,5	23,3	23	22,5	22	21	20	19	18	15	10,5	4,8			
TITAN 2AM 30-35		34		32	30	27,5	24,5	21	13														
TITAN 2AM 50-25		24		22	20,5	19	17,5	16	12	8	4												
TITAN 2AM 90-25		25		24	23	22	21	20	18	17	16	13	12	7									
TITAN 2AM 130-30		27				26	25,8	25,3	25	24,5	24	23	22	20	17	13	8	5					
TITAN 2AM 150-45		43				41	40,5	40	39	38	36	34	32	28	24	20	17	5					
TITAN 2AM 360-30		31,5								30,5	30,2	30	29,5	29	28,5	28	27,5	27	24	22	18	15	10
TITAN 2AH 70-45		45	43	42	39,5	38	36,5	35	31	28	24	17,5	10										
TITAN 2AH 50-70		68	65	61	59	54	53	50	42	35	28	18											
TITAN 2AH 130-75		73		72	71	70,5	70	69,5	68,5	67	66	64	62	57	51	41,5	28						
TITAN 2GL 25-24	H	24	22,7	20,8	18,3	15,5	12	7,6															
TITAN 2GL 35-28	[m]	28,4	27,2	25,9	24,4	22,5	20,3	17,5	10														
TITAN 2GL 40-16		16,2		15	14,5	13,6	12,5	11,4	8,6	4,5													
TITAN 2GL 50-20		19,3		18,4	18	17,3	16,5	15,5	13,2	9,8	5,7	1											
TITAN 2GL 60-31		31		27,8	27	25,5	24,5	23,4	20,9	17,8	14	9,3	2,8										
TITAN 2GL 70-38		38,2		36,2	35	33,9	33	31,2	28,4	25,2	21,6	17,7	13	1,6									
TITAN 2GL 80-22		21,8		21	20,5	20	19,5	19	18	17	15	13	11	5,5									
TITAN 2GL 95-25		25		24	23,5	23	22,5	22	21	20	18,3	17	15	10,9	6								
TITAN 2GL 90-45		44,5		44	43	42,3	41,5	38	38,3	36	32,6	29	25,6	16,9	7								
TITAN 2GL 105-52		51,5		50	49,5	49	48	47,5	46	44,5	42,3	40	36,8	29,4	19,5	6,6							
TITAN 2GL 150-26		26,3				26	25,7	25	24,5	24	23	22,5	21,5	19,3	17	14	11	2,8					
TITAN 2GL 155-38		38				37	36,2	36	35	34	33	32	31	28,2	25	20	16	5,2					
TITAN 2GM 145-67		67					63,2	63	62,8	62,5	62	61	60,5	58,5	55	48	38,5						
TITAN 2GM 180-62		62							59,5	59	58	56	54,5	51	47	44	38	25,8					
TITAN 2GM 155-77		77							70,5	70	69,5	69	67,3	65	60,5	56	46,8	19,7					
TITAN 2GM 155-83		83							79	78,8	78,6	78,4	78,2	78	74,6	70	60,5	27,8					
TITAN 2GM 195-92		93							88,3	88	87,8	87,5	87	86,5	85	83	78,6	64,5	27,4				
TITAN 2GM 270-58		58								54	53,8	53,6	53,4	53	52	51	50	47	41,5	32	16		
TITAN 2GM 330-60		61								57	56,5	56	55,5	54,7	54	53	52	51,5	49	45,5	39	28	10
TITAN 2GH 30-40		40,5	40	39	36	32	27	20	3														
TITAN 2GH 40-55		55	50,5	47,8	47	42,8	40	36,5	27,5	13													
TITAN 2GH 55-70		70	68	65,5	65	64	62	61,5	57,8	51,5	41,4	25,3	1,5										
TITAN 2GH 100-120		119		116	113	112,4	112	111	110	109	105,5	102	95,4	75,3	44								
TITAN 2GH 130-155		155		148	144	141,5	140	139	136	135	132,6	130	127,8	119	105,3	83,6	53						

TITAN - HYDRAULIC PERFORMANCE RANGE

1450 rpm

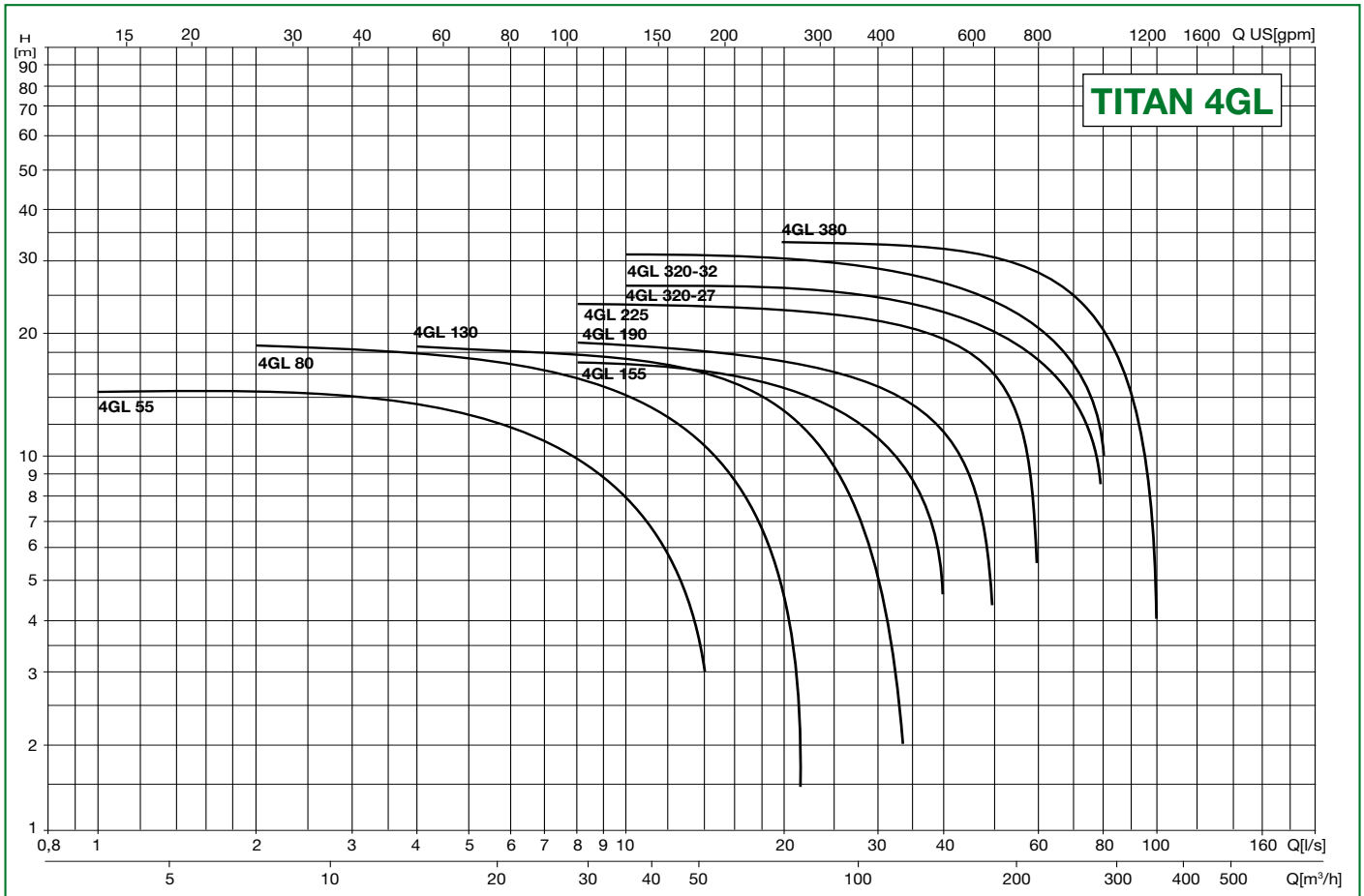

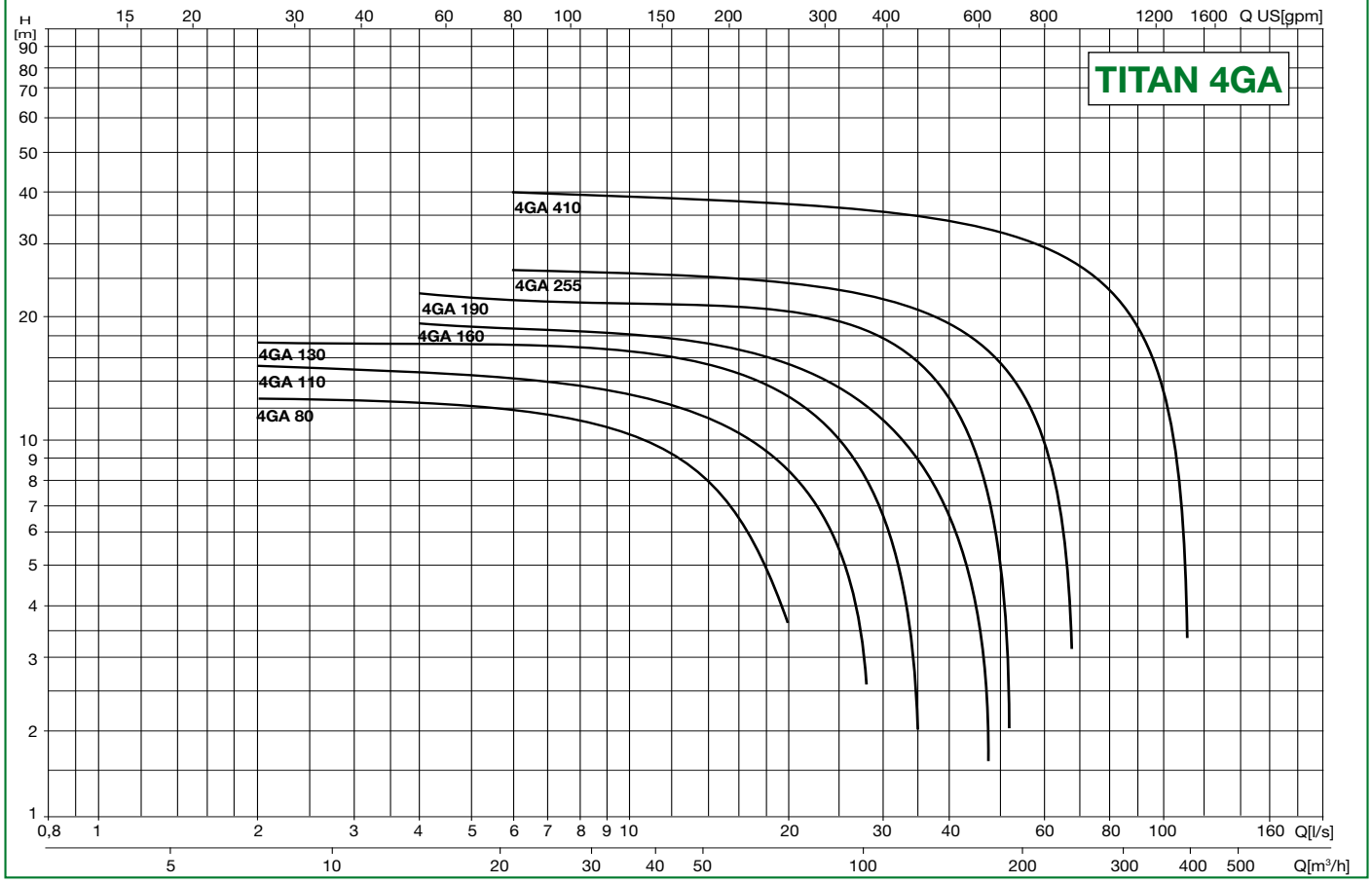

TITAN - RAPID SELECTION TABLE

1450 rpm

Type		Capacity																				
	l/s	0	2	4	6	8	10	12	14	16	20	24	28	32	40	50	60	70	80	90	100	110
	m³/h	0	7	14	22	29	36	43	50	58	72	86	101	115	144	180	216	252	288	324	360	396
TITAN 4GL 55-15	H [m]	15	14	13	11,5	10	8	5,7	3													
TITAN 4GL 80-20		20	19	18	16,5	15,5	14	12,5	11	9,2	4,5											
TITAN 4GL 130-19		19	18,8	18,4	18	17,6	17,2	16,5	15,9	15,2	13,4	11,2	8	4,4								
TITAN 4GL 155-18		18,5		17,5	17	16,6	16,3	16	15,6	15,2	14,4	13,5	11,5	11	4,7							
TITAN 4GL 190-20		20,5		19,8	19,6	19,2	18,8	18,5	18,2	18	18,3	18	17,5	17	12,5	4,4						
TITAN 4GL 225-26		25,5		24,5	23,8	23,4	23	22,8	22,5	22,3	22,2	22,1	22	21,8	19,9	14,7	5,3					
TITAN 4GL 320-27		26,8					26	25,8	25,5	25,3	25	24,8	24	23,5	22,3	20	17,4	13,8	8,6			
TITAN 4GL 320-32		31,5					30,6	30,5	30,2	30	29,8	29	28	27,5	27	24,6	21,3	16,8	10			
TITAN 4GL 380-35		35					34	33,8	33,5	33,3	33	32,8	32,2	31	30,7	29,3	27	24	20	14	4	
TITAN 4GA 80-14		13,5	13	12,3	11,6	11	10,4	9,5	8,7	7,3	3,6											
TITAN 4GA 110-16		16	15,5	14,7	14	13,3	12,8	12	11,2	10,3	8,3	5,8	2,6									
TITAN 4GA 130-18		18	17,3	16,7	16,2	15,7	15,3	14,8	14,2	13,7	12,4	10,8	8,5	5,5								
TITAN 4GA 160-20		20,5		19	17,8	18,3	18	17,6	17,5	17,2	16,8	15,6	14,5	12,6	6,7							
TITAN 4GA 190-24		24		22,5	22	21,4	21	20,8	20,5	20,2	20	19,6	18,5	18	13,5	3,5						
TITAN 4GA 255-28		27,5		27	26	25,4	25,2	25	24,5	24	23,5	22,8	22,5	21,4	19,5	16	10,5	2				
TITAN 4GA 410-40		41					38,5	38	37,8	37,5	36,4	36	35	34	33,2	32	30	28	24	18,5	12,4	5

SUBMERSIBLE DRAINAGE PUMPS
STAINLESS STEEL
TITAN 2X

Submersible electric pump with dual external chamber for optimal motor cooling also with low suction levels. Pump body and impeller in GJL-200 cast iron. Outer jacket and motor casing in AISI 304 stainless steel. Motor shaft in AISI 410 stainless steel. Suction base in NBR rubber, vertical discharge port in AISI 304 stainless steel.

Motor with IP68 protection rating. Standard thermal protection device: internal thermal cutout.
Double mechanical oil bath seal. Primary seal in silicon carbide, secondary seal in ceramic - graphite.

Bearings prelubricated with grease.
Maximum head: 11 m w.c.
Connections: 1” (25 mm)
Maximum immersion depth: 5 m
Minimum suction level: 2 mm
Liquid temperature: 0 °C +40 °C

TITAN 2XL

SUBMERSIBLE DRAINAGE PUMP
DN 25 - 1” STAINLESS STEEL - 2900 rpm

Liquid temperature: 0°C +40°C
Max. ambient temperature: +40°C
(with motor exposed to air)

Power cable: 5 m (H07RN-F)
Maximum immersion depth: 5 m

Accessories see page 69
Special executions on request

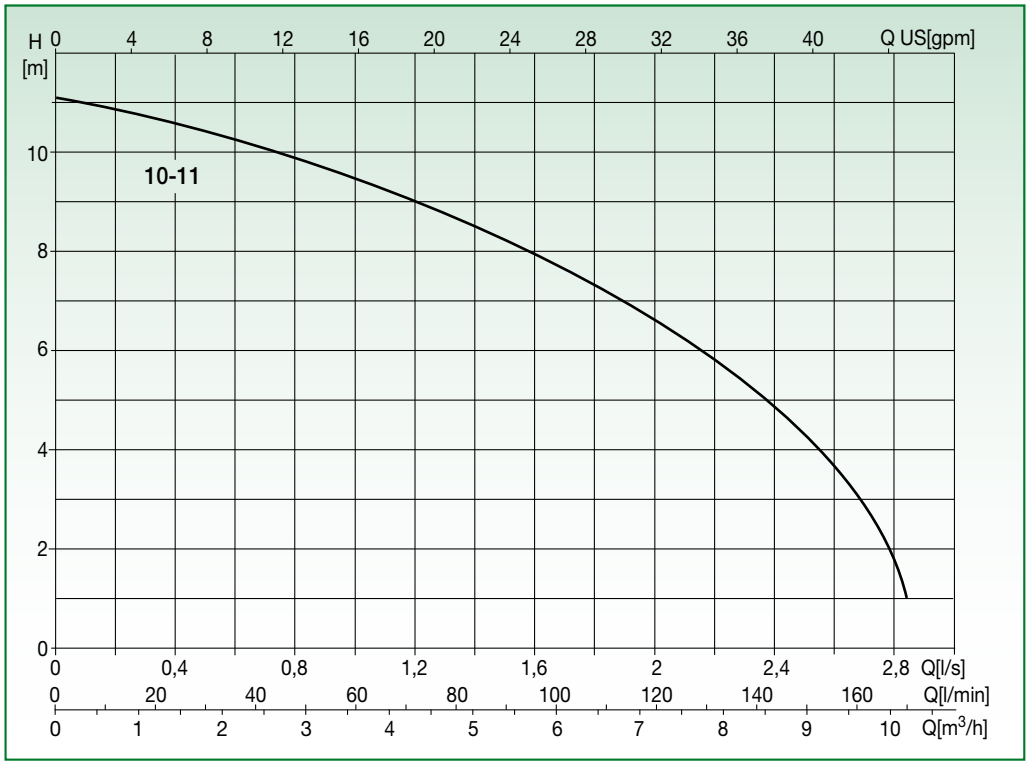

Test to UNI EN ISO 9906 level 2 - Test liquid: water (ρ = 1000 kg/m³, kinematic viscosity ν = 1 mm²/s)
Tolerance on performance curves to UNI EN ISO 9906 Annex A

PERFORMANCE DATA

Code	Type	Motor				Flow rate							
		P_{1n}	P_{2n}	V_n	I_n	[l/s]	0	0,5	1	1,5	2	2,5	2,83
		[kW]	[kW]	[V]	[A]	[m³/h]	0	1,8	3,6	5,4	7,2	9	10,2
10030720	TITAN 2XL 10-11	0,6	0,37	1x230	2,7	H [m]	11,1	10,5	9,5	8,1	6,6	4,3	1

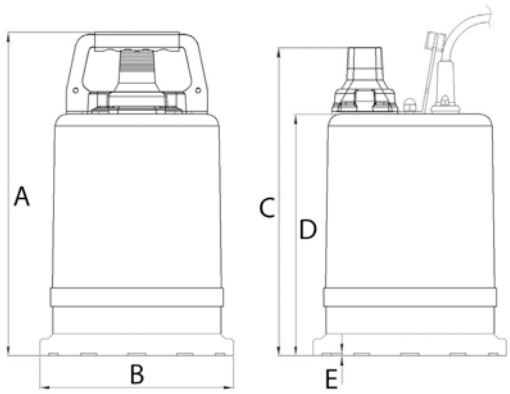

DIMENSIONAL DATA

Type	Cable	Dimensions [mm]					Connection		Solids handling [mm]	Weight [kg]
	[n° x mm²]	A	B	C	D	E	[mm]	[in]		
TITAN 2XL 10-11	3 x 1	343	205	326	254	2	25	1”	2	16

SUBMERSIBLE DRAINAGE PUMPS
ALUMINIUM
TITAN 2A

Submersible electric pump with dual external chamber for optimal motor cooling also with low suction levels. Cast iron body external jacket and motor casing in AISI 304 stainless steel. Motor shaft in AISI 420 stainless steel. Impeller in hard chrome cast iron (2AM-2AH versions) or in high-chrome hardened steel (2AL versions) for high abrasion resistance (hardness 60 HRC). Wear parts in NBR rubber.

Motor protection rating IP68. Integral contactor on direct starting models. Thermal protection supplied as standard with bimetal microswitch on each phase.
Double mechanical seal with interposed oil chamber. Primary seal in silicon carbide, secondary seal in stainless steel - graphite.

Bearings prelubricated with grease.
Maximum head: 73 m w.c.
Connections: 2” ÷ 6” (50 mm ÷ 150 mm)
Maximum immersion depth: 20 m
Liquid temperature: 0 °C +40 °C

TITAN 2AL

SUBMERSIBLE DRAINAGE PUMP
DN 50 - 2” ALUMINIUM - 2900 rpm

Liquid temperature: 0°C +40°C
Max. ambient temperature: +40°C
(with motor exposed to air)

Power cable: 20 m (H07RN-F)
Maximum immersion depth: 20 m

Accessories see page 69
Special executions on request

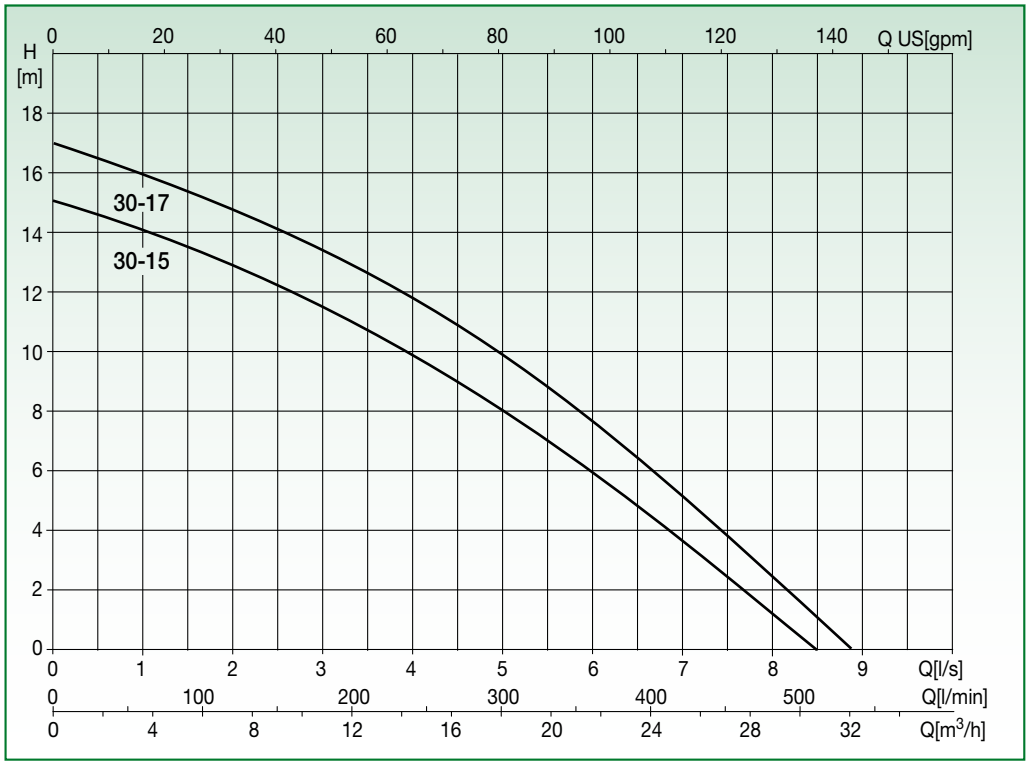

Test to UNI EN ISO 9906 level 2 - Test liquid: water (ρ = 1000 kg/m^3, kinematic viscosity ν = 1 mm^2/s)
Tolerance on performance curves to UNI EN ISO 9906 Annex A

PERFORMANCE DATA

Code	Type	Motor				Flow rate									
		P_{1n}	P_{2n}	V_n	I_n	[l/s]	0	1	2	3	4	5	6	7	8
		[kW]	[kW]	[V]	[A]	[m³/h]	0	3,6	7	11	14	18	22	25	29
10039689	TITAN 2AL 30-15*	1,2	0,9	1x230	5,2	H [m]	15	14	13	11,5	10	8	6	3,5	1,5
10039690	TITAN 2AL 30-15A*	1,2	0,9	1x230	5,2		15	14	13	11,5	10	8	6	3,5	1,5
10039691	TITAN 2AL 30-17	1,25	1	3x400	2,3		17	16	15	13	12	10	7,5	5	2,5
10039692	TITAN 2AL 30-17A	1,25	1	3x400	2,3		17	16	15	13	12	10	7,5	5	2,5

* single; 15A - 17A: version with automatic float

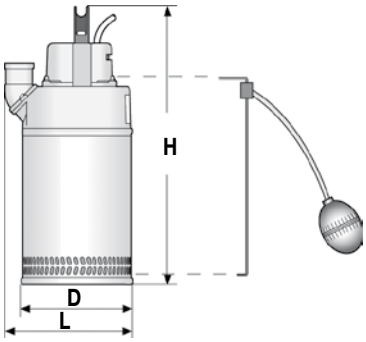

DIMENSIONAL DATA

Type	Cable	Dimensions [mm]			Connection		Solids handling [mm]	Weight [kg]
	[n° x mm²]	D	L	H	[mm]	[in]		
TITAN 2AL 30-15	3 x 1,5	202	231	469	50	2”	6,5x15,5	16
TITAN 2AL 30-15A	3 x 1,5	202	231	469	50	2”	6,5x15,5	16
TITAN 2AL 30-17	4 x 1,5	202	231	469	50	2”	6,5x15,5	16
TITAN 2AL 30-17A	4 x 1,5	202	231	469	50	2”	6,5x15,5	16

TITAN 2AL

SUBMERSIBLE DRAINAGE PUMP
DN 50 - 2” ALUMINIUM - 2900 rpm

Liquid temperature: 0°C +40°C
Max. ambient temperature: +40°C
(with motor exposed to air)

Power cable: 20 m (H07RN-F)
Maximum immersion depth: 20 m

Accessories see page 69
Special executions on request

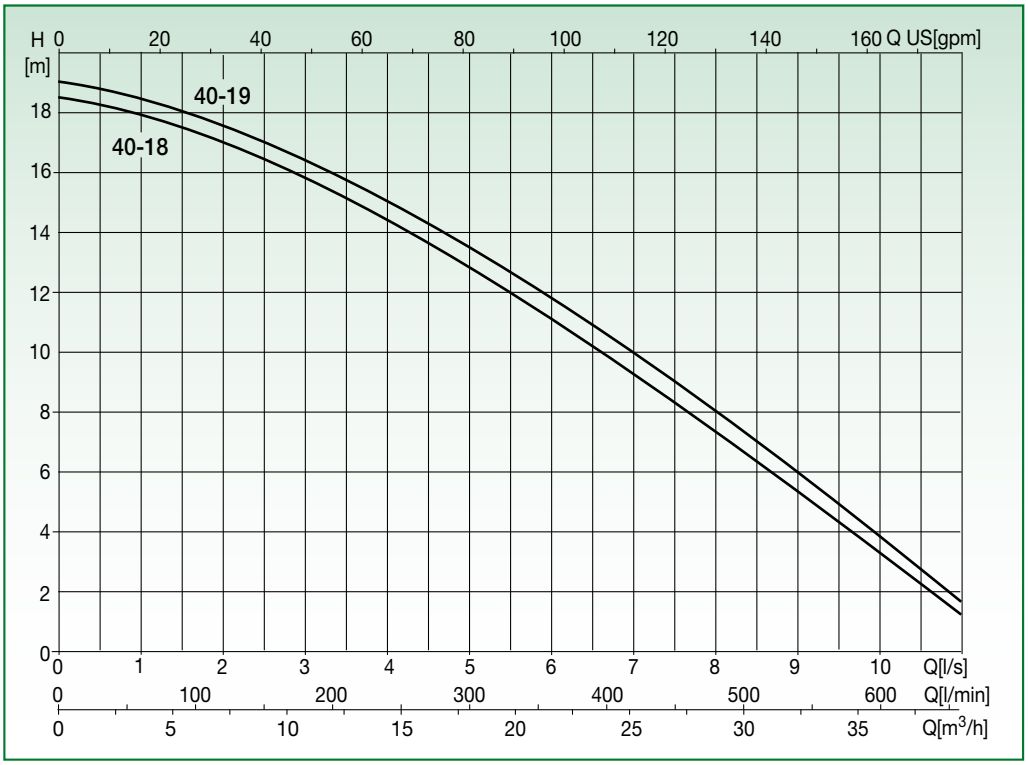

Test to UNI EN ISO 9906 level 2 - Test liquid: water (ρ = 1000 kg/m³, kinematic viscosity ν = 1 mm²/s)
Tolerance on performance curves to UNI EN ISO 9906 Annex A

PERFORMANCE DATA

Code	Type	Motor				Flow rate											
		P_{1n}	P_{2n}	V_n	I_n	[l/s]	0	1	2	3	4	5	6	7	8	9	10
		[kW]	[kW]	[V]	[A]	[m³/h]	0	3,6	7	11	14	18	22	25	29	32	36
10039693	TITAN 2AL 40-18*	1,9	1,4	1x230	8,1	H [m]	18,5	18	17	16	14,5	13	11	9	7,5	5	3
10039694	TITAN 2AL 40-18A*	1,9	1,4	1x230	8,1		18,5	18	17	16	14,5	13	11	9	7,5	5	3
10039695	TITAN 2AL 40-19	1,8	1,4	3x400	2,9		19	18	18	16	15	14	12	10	8	6	4
10039696	TITAN 2AL 40-19A	1,8	1,4	3x400	2,9		19	18	18	16	15	14	12	10	8	6	4

* single; 18A - 19A: version with automatic float

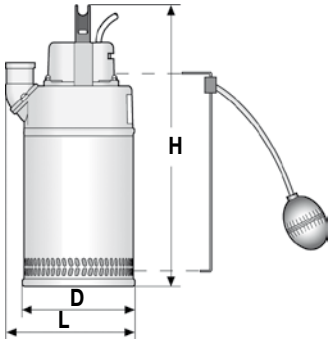

DIMENSIONAL DATA

Type	Cable	Dimensions [mm]			Connection		Solids handling [mm]	Weight [kg]
	[n° x mm²]	D	L	H	[mm]	[in]		
TITAN 2AL 40-18	3 x 1,5	202	231	514	50	2”	6,5x15,5	18
TITAN 2AL 40-18A	3 x 1,5	202	231	514	50	2”	6,5x15,5	18
TITAN 2AL 40-19	4 x 1,5	202	231	469	50	2”	6,5x15,5	17
TITAN 2AL 40-19A	4 x 1,5	202	231	469	50	2”	6,5x15,5	17

TITAN 2AL

SUBMERSIBLE DRAINAGE PUMP
DN 75 - 3” ALUMINIUM - 2900 rpm

Liquid temperature: 0°C +40°C
Max. ambient temperature: +40°C
(with motor exposed to air)

Power cable: 20 m (H07RN-F)
Maximum immersion depth: 20 m

Accessories see page 69
Special executions on request

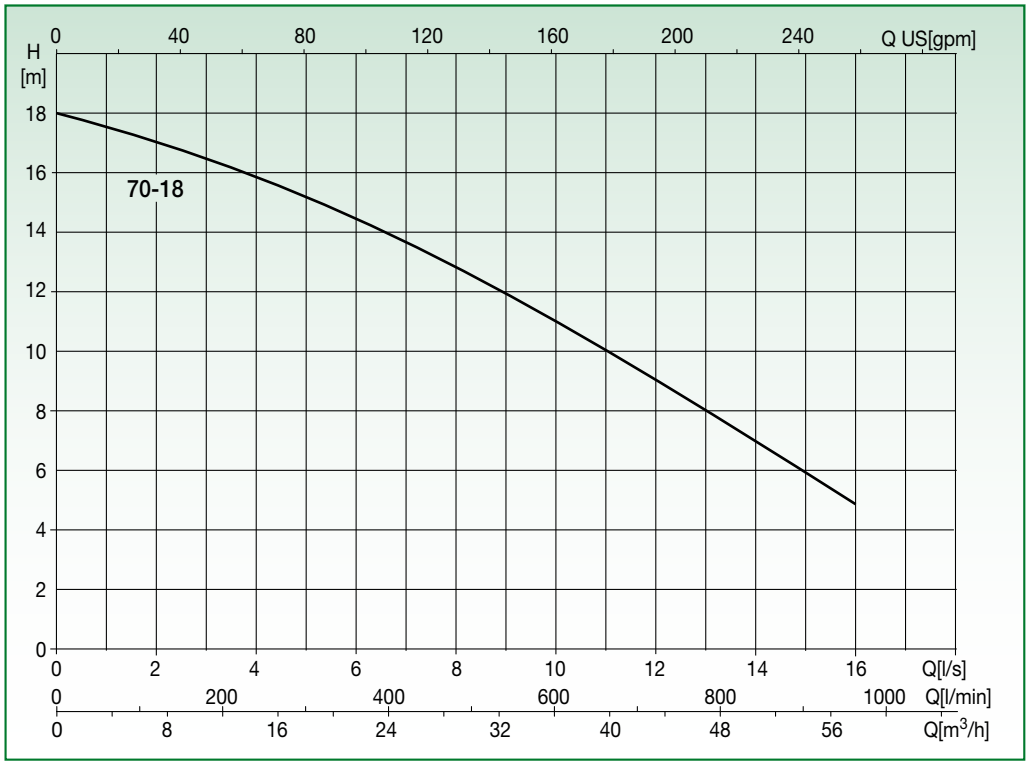

Test to UNI EN ISO 9906 level 2 - Test liquid: water (ρ = 1000 kg/m^3, kinematic viscosity ν = 1 mm^2/s)
Tolerance on performance curves to UNI EN ISO 9906 Annex A

PERFORMANCE DATA

Code	Type	Motor				Flow rate									
		P_{1n}	P_{2n}	V_n	I_n	[l/s]	0	2	4	6	8	10	12	14	16
		[kW]	[kW]	[V]	[A]	[m³/h]	0	7	14	22	29	36	43	50	58
10039697	TITAN 2AL 70-18	2,8	2,2	3x400	5,5	H [m]	18	17	16	14,5	13	11	9	7	5

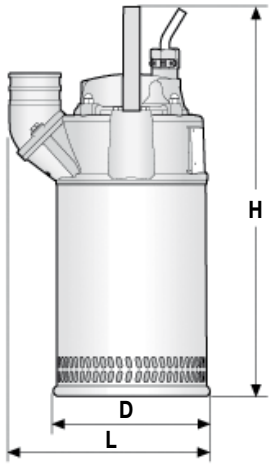

DIMENSIONAL DATA

Type	Cable	Dimensions [mm]			Connection		Solids handling [mm]	Weight [kg]
	[n° x mm²]	D	L	H	[mm]	[in]		
TITAN 2AL 70-18	4 x 1,5	230	296	567	75	3”	7,5x16,5	27

TITAN 2AL

SUBMERSIBLE DRAINAGE PUMP
DN 75 - 3” ALUMINIUM - 2900 rpm

Liquid temperature: 0°C +40°C
Max. ambient temperature: +40°C
(with motor exposed to air)

Power cable: 20 m (H07RN-F)
Maximum immersion depth: 20 m

Accessories see page 69
Special executions on request

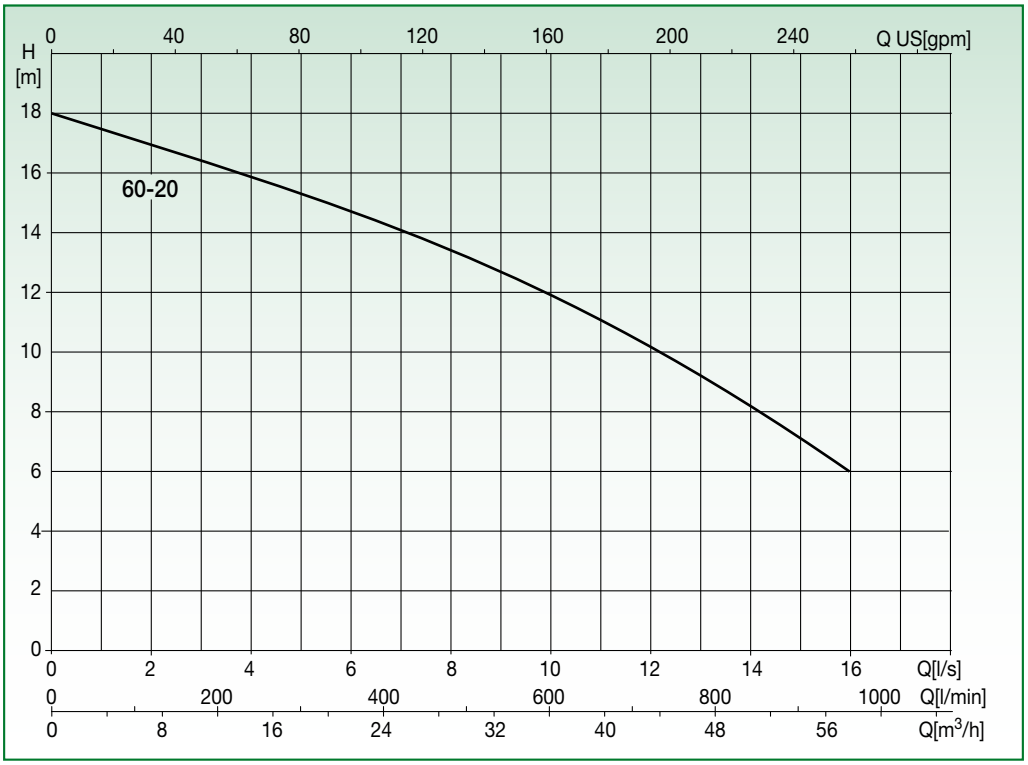

Test to UNI EN ISO 9906 level 2 - Test liquid: water (ρ = 1000 kg/m^3, kinematic viscosity ν = 1 mm^2/s)
Tolerance on performance curves to UNI EN ISO 9906 Annex A

PERFORMANCE DATA

Code	Type	Motor				Flow rate									
		P_{1n}	P_{2n}	V_n	I_n	[l/s]	0	2	4	6	8	10	12	14	16
		[kW]	[kW]	[V]	[A]	[m^3/h]	0	7	14	22	29	36	43	50	58
10039699	TITAN 2AL 60-20	3,8	3	3x400	7,3	H [m]	18	17	16	14,5	13	12	10	8	6

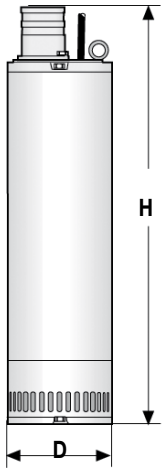

DIMENSIONAL DATA

Type	Cable	Dimensions [mm]			Connection		Solids handling [mm]	Weight [kg]
	[n° x mm^2]	D	L	H	[mm]	[in]		
TITAN 2AL 60-20	4 x 1,5	184	-	728	75	3”	8x33	31

TITAN 2AL

SUBMERSIBLE DRAINAGE PUMP
DN 150 - 6” ALUMINIUM - 2900 rpm

Liquid temperature: 0°C +40°C
Max. ambient temperature: +40°C
(with motor exposed to air)

Power cable: 20 m (H07RN-F)
Maximum immersion depth: 20 m

Accessories see page 69
Special executions on request

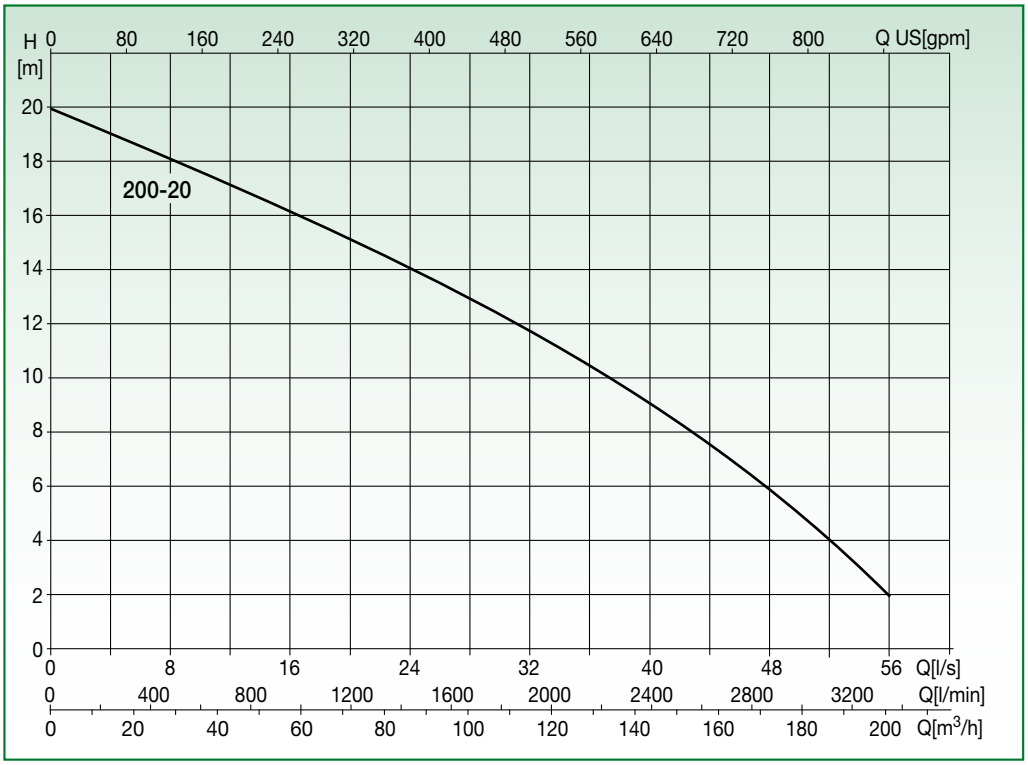

Test to UNI EN ISO 9906 level 2 - Test liquid: water (ρ = 1000 kg/m^3, kinematic viscosity ν = 1 mm^2/s)
Tolerance on performance curves to UNI EN ISO 9906 Annex A

PERFORMANCE DATA

Code	Type	Motor				Flow rate								
		P_{1n}	P_{2n}	V_n	I_n	[l/s]	0	8	16	24	32	40	48	56
		[kW]	[kW]	[V]	[A]	[m^3/h]	0	29	58	86	115	144	173	201
10039704	TITAN 2AL 200-20	6,8	5,8	3x400	12	H [m]	20	18	16	14	11,5	9	6	2

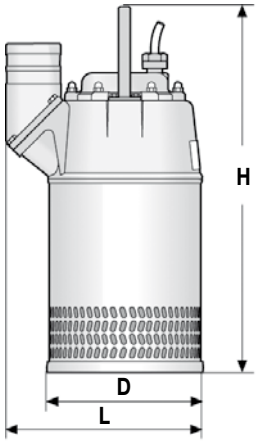

DIMENSIONAL DATA

Type	Cable	Dimensions [mm]			Connection		Solids handling [mm]	Weight [kg]
	[n° x mm^2]	D	L	H	[mm]	[in]		
TITAN 2AL 200-20	4 x 2,5	289	405	710	150	6”	7,5x16,5	50

TITAN 2AL

SUBMERSIBLE DRAINAGE PUMP
DN 150 - 6” ALUMINIUM - 2900 rpm

Liquid temperature: 0°C +40°C
Max. ambient temperature: +40°C
(with motor exposed to air)

Power cable: 20 m (H07RN-F)
Maximum immersion depth: 20 m

Accessories see page 69
Special executions on request

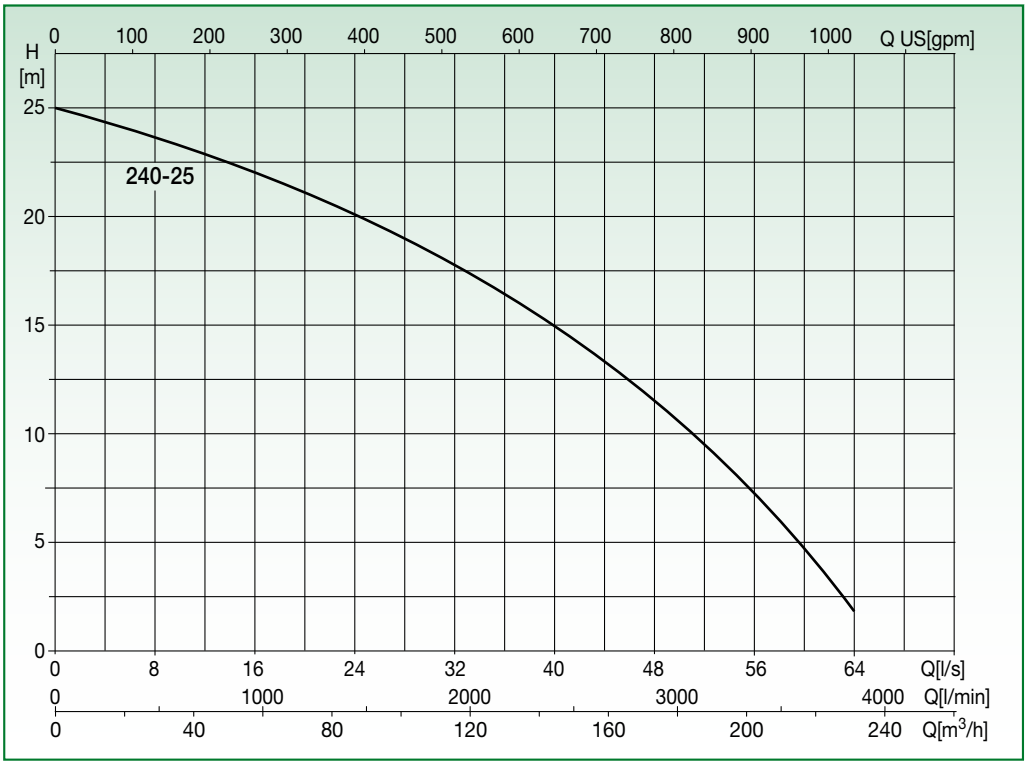

Test to UNI EN ISO 9906 level 2 - Test liquid: water (ρ = 1000 kg/m^3, kinematic viscosity ν = 1 mm^2/s)
Tolerance on performance curves to UNI EN ISO 9906 Annex A

PERFORMANCE DATA

Code	Type	Motor				Flow rate												
		P_{1n}	P_{2n}	V_n	I_n	[l/s]	0	4	8	12	16	20	24	32	40	48	56	64
		[kW]	[kW]	[V]	[A]	[m^3/h]	0	14	29	43	58	72	86	115	144	173	202	230
10039707	TITAN 2AL 240-25	10,8	9,4	3x400	18	H [m]	25	24	23,5	23	22	21	20	18	15	12	7	2

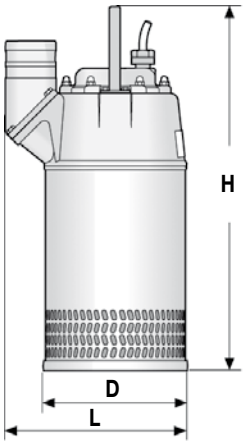

DIMENSIONAL DATA

Type	Cable	Dimensions [mm]			Connection		Solids handling [mm]	Weight [kg]
	[n° x mm^2]	D	L	H	[mm]	[in]		
TITAN 2AL 240-25	4 x 4	289	405	757	150	6”	7,5x16,5	70

TITAN 2AM

SUBMERSIBLE DRAINAGE PUMP
DN 50 - 2” ALUMINIUM - 2900 rpm

Liquid temperature: 0°C +40°C
Max. ambient temperature: +40°C
(with motor exposed to air)

Power cable: 20 m (H07RN-F)
Maximum immersion depth: 20 m

Accessories see page 69
Special executions on request

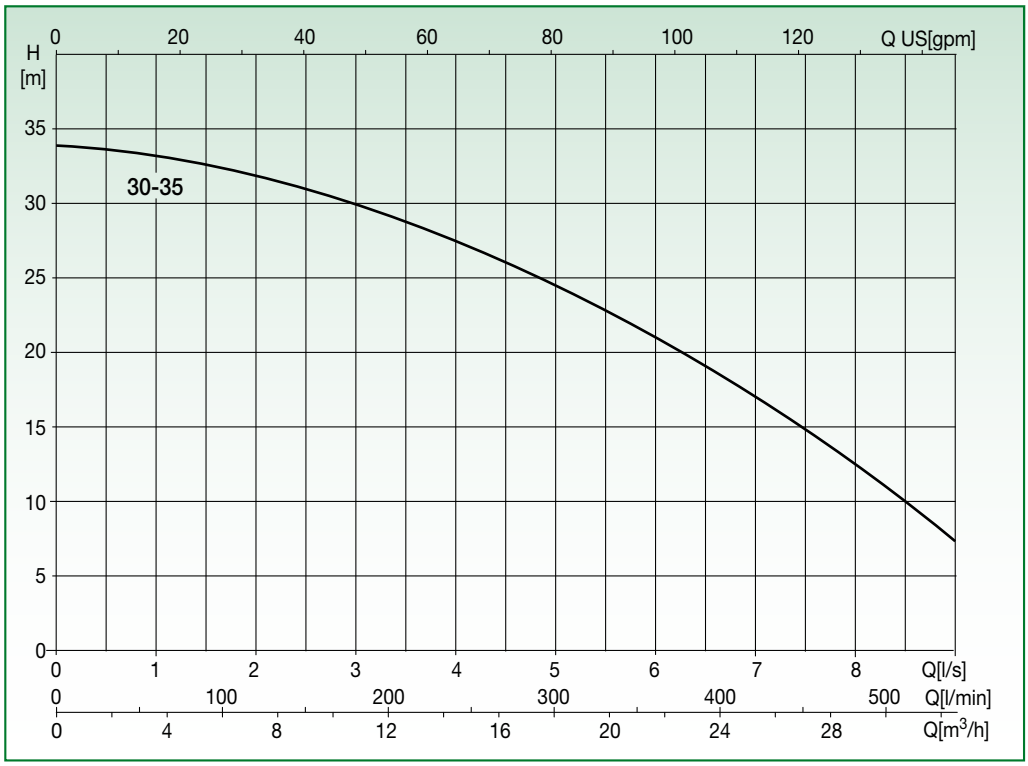

Test to UNI EN ISO 9906 level 2 - Test liquid: water (ρ = 1000 kg/m³, kinematic viscosity ν = 1 mm²/s)
Tolerance on performance curves to UNI EN ISO 9906 Annex A

PERFORMANCE DATA

Code	Type	Motor				Flow rate						
		P_{1n}	P_{2n}	V_n	I_n	[l/s]	0	2	4	6	8	9
		[kW]	[kW]	[V]	[A]	[m³/h]	0	7	14	22	29	32,4
10039700	TITAN 2AM 30-35	3,8	3	3x400	7,3	H [m]	34	32	27,5	21	13	8

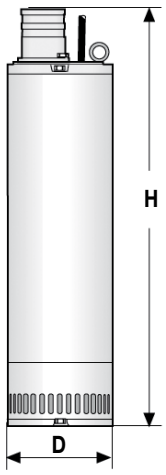

DIMENSIONAL DATA

Type	Cable	Dimensions [mm]			Connection		Solids handling [mm]	Weight [kg]
	[n° x mm²]	D	L	H	[mm]	[in]		
TITAN 2AM 30-35	4 x 1,5	184	-	728	50	2”	8x33	31

TITAN 2AM

SUBMERSIBLE DRAINAGE PUMP
DN 75 - 3” ALUMINIUM - 2900 rpm

Liquid temperature: 0°C +40°C
Max. ambient temperature: +40°C
(with motor exposed to air)

Power cable: 20 m (H07RN-F)
Maximum immersion depth: 20 m

Accessories see page 69
Special executions on request

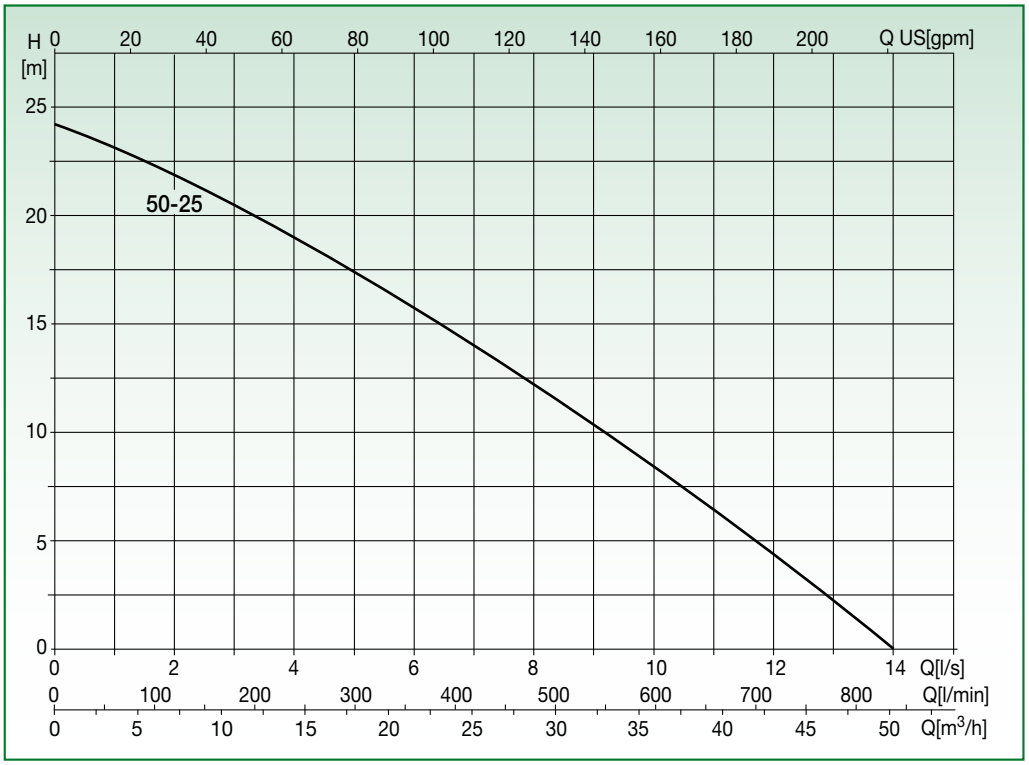

Test to UNI EN ISO 9906 level 2 - Test liquid: water (ρ = 1000 kg/m^3, kinematic viscosity ν = 1 mm^2/s)
Tolerance on performance curves to UNI EN ISO 9906 Annex A

PERFORMANCE DATA

Code	Type	Motor				Flow rate							
		P_{1n}	P_{2n}	V_n	I_n	[l/s]	0	2	4	6	8	10	12
		[kW]	[kW]	[V]	[A]	[m³/h]	0	7	14	22	29	36	43
10039698	TITAN 2AM 50-25	2,8	2,2	3x400	5,5	H [m]	24	22	19	16	12	8	4

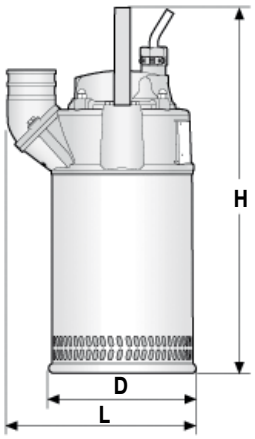

DIMENSIONAL DATA

Type	Cable	Dimensions [mm]			Connection		Solids handling [mm]	Weight [kg]
	[n° x mm²]	D	L	H	[mm]	[in]		
TITAN 2AM 50-25	4 x 1,5	230	296	567	75	3”	7,5x16,5	27

TITAN 2AM

SUBMERSIBLE DRAINAGE PUMP
DN 75 - 3” ALUMINIUM - 2900 rpm

Liquid temperature: 0°C +40°C
Max. ambient temperature: +40°C
(with motor exposed to air)

Power cable: 20 m (H07RN-F)
Maximum immersion depth: 20 m

Accessories see page 69
Special executions on request

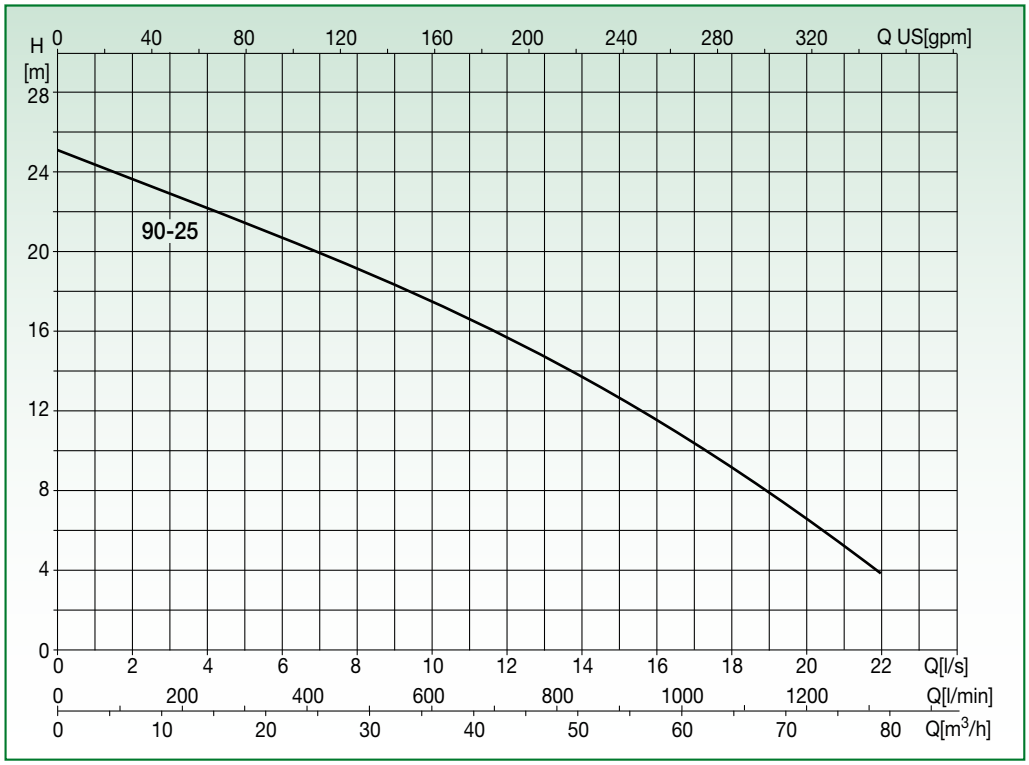

Test to UNI EN ISO 9906 level 2 - Test liquid: water (ρ = 1000 kg/m^3, kinematic viscosity ν = 1 mm^2/s)
Tolerance on performance curves to UNI EN ISO 9906 Annex A

PERFORMANCE DATA

Code	Type	Motor				Flow rate												
		P_{1n}	P_{2n}	V_n	I_n	[l/s]	0	2	4	6	8	10	12	14	16	18	20	22
		[kW]	[kW]	[V]	[A]	[m^3/h]	0	7	14	22	29	36	43	50	58	65	72	79
10039701	**TITAN 2AM 90-25**	4,7	4,2	3x400	8,7	**H [m]**	25	24	22	20	18	17	16	13	12	8	7	4

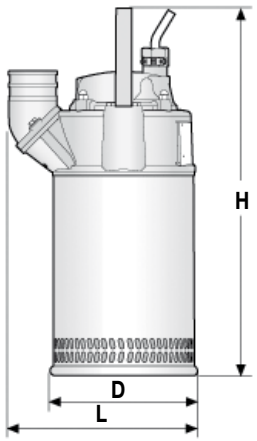

DIMENSIONAL DATA

Type	Cable	Dimensions [mm]			Connection		Solids handling [mm]	Weight [kg]
	[n° x mm^2]	D	L	H	[mm]	[in]		
TITAN 2AM 90-25	4 x 2,5	230	296	567	75	3”	7,5x16,5	36

TITAN 2AM

SUBMERSIBLE DRAINAGE PUMP
DN 100 - 4” ALUMINIUM - 2900 rpm

Liquid temperature: 0°C +40°C
Max. ambient temperature: +40°C
(with motor exposed to air)

Power cable: 20 m (H07RN-F)
Maximum immersion depth: 20 m

Accessories see page 69
Special executions on request

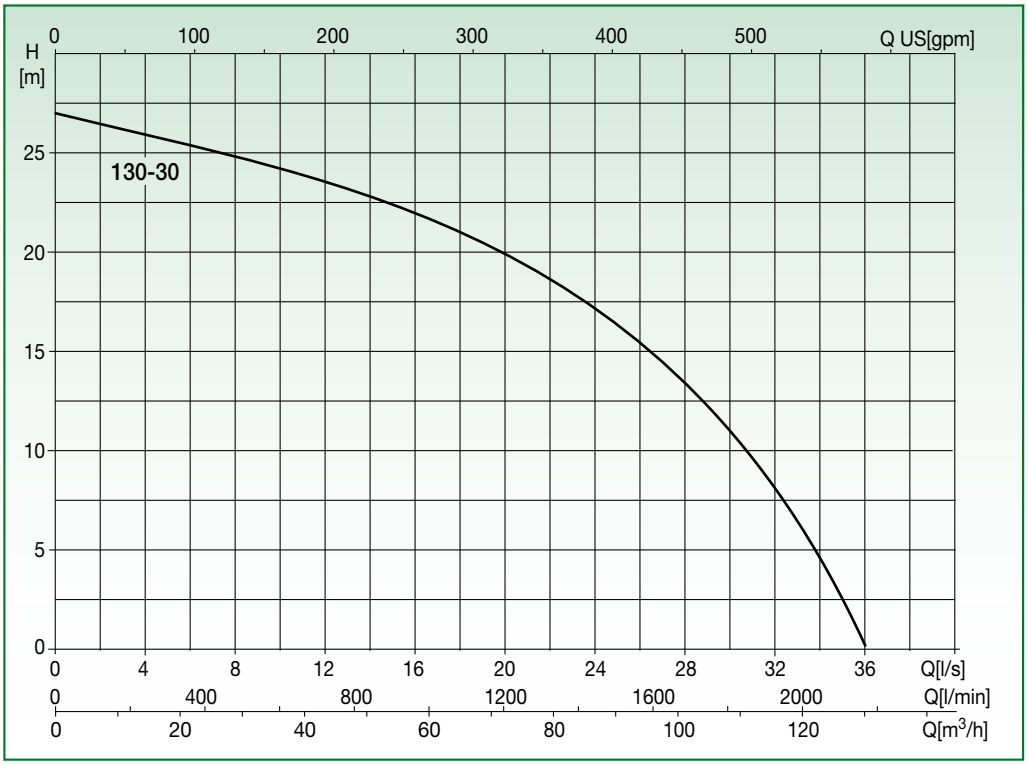

Test to UNI EN ISO 9906 level 2 - Test liquid: water (ρ = 1000 kg/m^3, kinematic viscosity ν = 1 mm^2/s)
Tolerance on performance curves to UNI EN ISO 9906 Annex A

PERFORMANCE DATA

Code	Type	Motor				Flow rate										
		P_{1n}	P_{2n}	V_n	I_n	[l/s]	0	4	8	12	16	20	24	28	32	35
		[kW]	[kW]	[V]	[A]	[m^3/h]	0	14	29	43	58	72	86	101	115	126
10039702	TITAN 2AM 130-30	6,8	5,8	3x400	12	H [m]	27	26	25	24	22	20	17	13	8	2,5

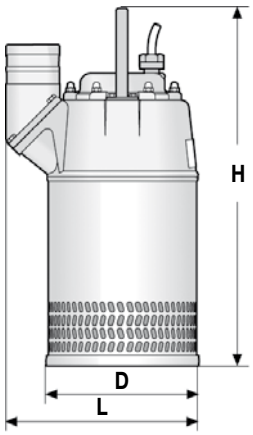

DIMENSIONAL DATA

Type	Cable	Dimensions [mm]			Connection		Solids handling [mm]	Weight [kg]
	[n° x mm^2]	D	L	H	[mm]	[in]		
TITAN 2AM 130-30	4 x 2,5	289	364	686	100	4”	7,5x16,5	50

TITAN 2AM

SUBMERSIBLE DRAINAGE PUMP
DN 100 - 4” ALUMINIUM - 2900 rpm

Liquid temperature: 0°C +40°C
Max. ambient temperature: +40°C
(with motor exposed to air)

Power cable: 20 m (H07RN-F)
Maximum immersion depth: 20 m

Accessories see page 69
Special executions on request

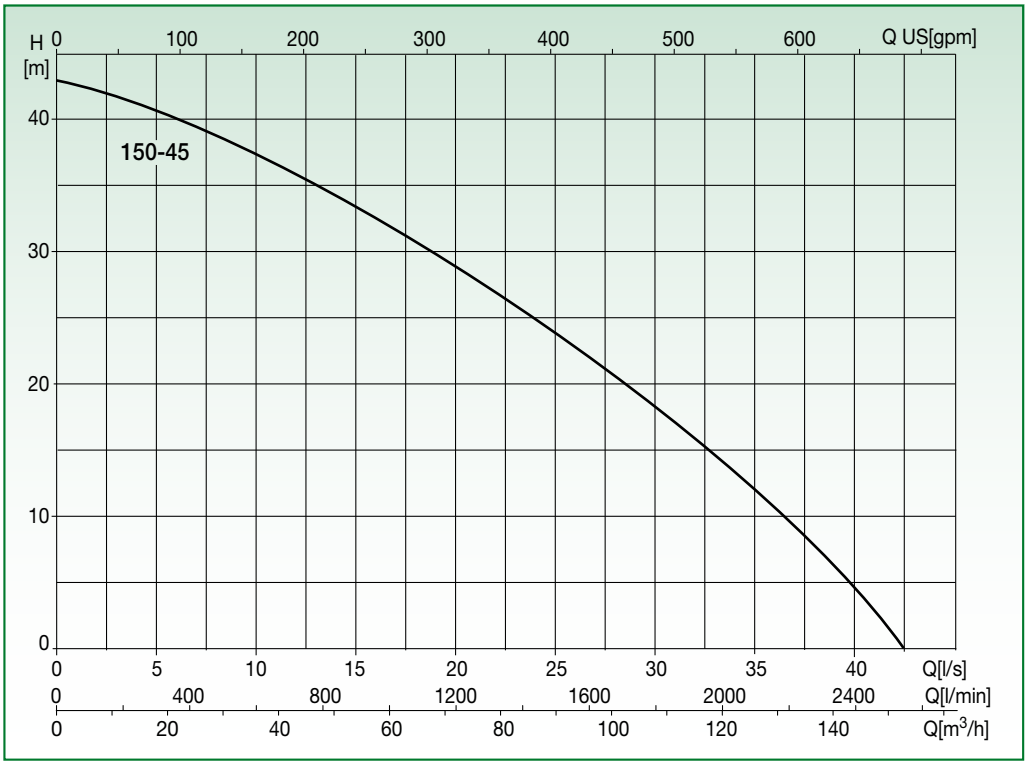

Test to UNI EN ISO 9906 level 2 - Test liquid: water (ρ = 1000 kg/m^3, kinematic viscosity ν = 1 mm^2/s)
Tolerance on performance curves to UNI EN ISO 9906 Annex A

PERFORMANCE DATA

Code	Type	Motor				Flow rate												
		P_{1n}	P_{2n}	V_n	I_n	[l/s]	0	2	4	6	8	10	12	16	20	24	32	40
		[kW]	[kW]	[V]	[A]	[m^3/h]	0	7	14	22	29	36	43	58	72	86	115	144
10039705	**TITAN 2AM 150-45**	10,8	9,4	3x400	18	**H [m]**	43	42	41	40	39	38	36	32	28	24	17	5

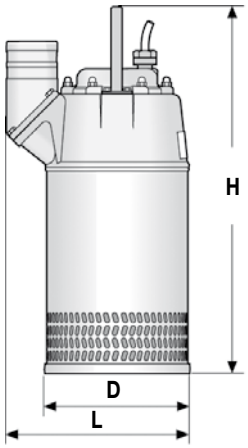

DIMENSIONAL DATA

Type	Cable	Dimensions [mm]			Connection		Solids handling [mm]	Weight [kg]
	[n° x mm^2]	D	L	H	[mm]	[in]		
TITAN 2AM 150-45	4 x 4	289	364	771	100	4”	7,5x16,5	70

TITAN 2AM

SUBMERSIBLE DRAINAGE PUMP
DN 150 - 6” ALUMINIUM - 2900 rpm

Liquid temperature: 0°C +40°C
Max. ambient temperature: +40°C
(with motor exposed to air)

Power cable: 20 m (H07RN-F)
Maximum immersion depth: 20 m

Accessories see page 69
Special executions on request

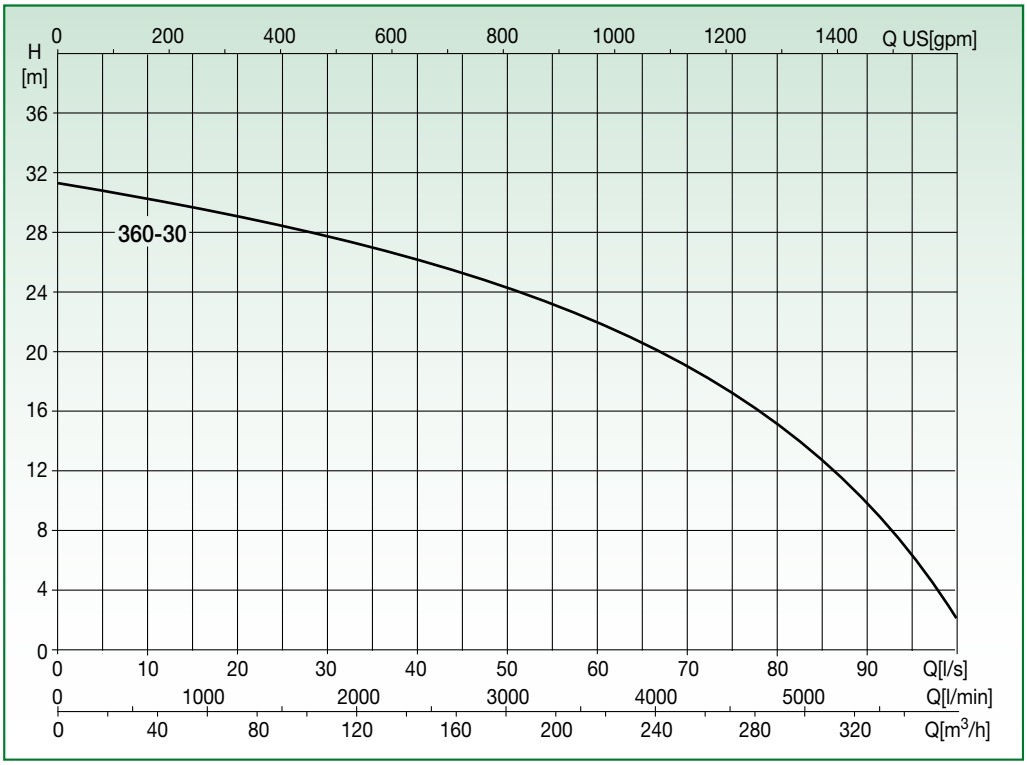

Test to UNI EN ISO 9906 level 2 - Test liquid: water (ρ = 1000 kg/m^3, kinematic viscosity ν = 1 mm^2/s)
Tolerance on performance curves to UNI EN ISO 9906 Annex A

PERFORMANCE DATA

Code	Type	Motor				Flow rate										
		P_{1n}	P_{2n}	V_n	I_n	[l/s]	0	10	20	30	40	50	60	70	80	90
		[kW]	[kW]	[V]	[A]	[m^3/h]	0	36	72	108	144	180	216	252	288	324
10039708	**TITAN 2AM 360-30**	24	21	3x400	39	**H [m]**	31,5	30,5	29	28	27	24	22	18	15	10

Star-delta starting

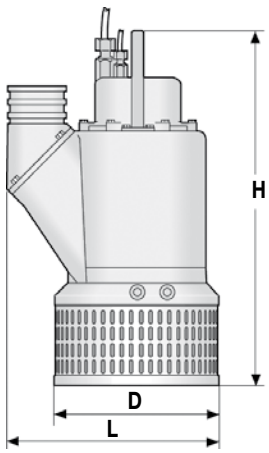

DIMENSIONAL DATA

Type	Cable	Dimensions [mm]			Connection		Solids handling [mm]	Weight [kg]
	[n° x mm^2]	D	L	H	[mm]	[in]		
TITAN 2AM 360-30	2-4 x 6	450	570	915	150	6”	8x34	155

TITAN 2AH

SUBMERSIBLE DRAINAGE PUMP
DN 75 - 3” ALUMINIUM - 2900 rpm

Liquid temperature: 0°C +40°C
Max. ambient temperature: +40°C
(with motor exposed to air)

Power cable: 20 m (H07RN-F)
Maximum immersion depth: 20 m

Accessories see page 69
Special executions on request

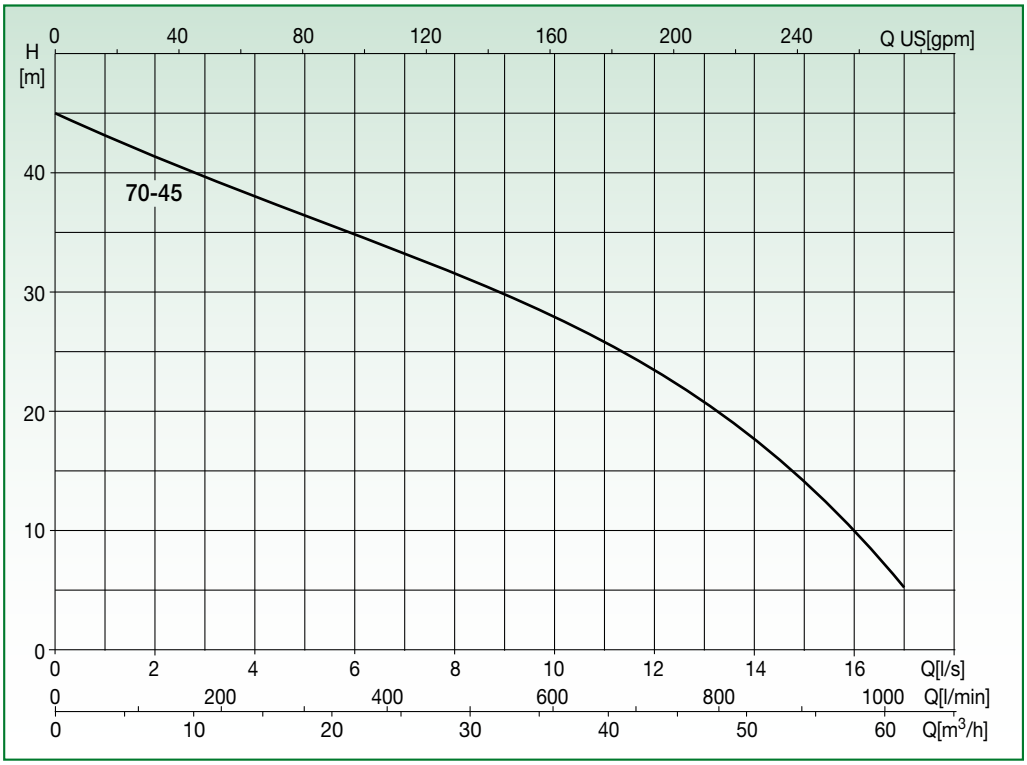

Test to UNI EN ISO 9906 level 2 - Test liquid: water (ρ = 1000 kg/m^3, kinematic viscosity ν = 1 mm^2/s)
Tolerance on performance curves to UNI EN ISO 9906 Annex A

PERFORMANCE DATA

Code	Type	Motor				Flow rate								
		P_{1n}	P_{2n}	V_n	I_n	[l/s]	0	2	4	6	8	10	12	16
		[kW]	[kW]	[V]	[A]	[m³/h]	0	7	14	22	29	36	43	58
10039703	TITAN 2AH 70-45	6,8	5,8	3x400	12	H [m]	45	42	38	35	31	28	24	10

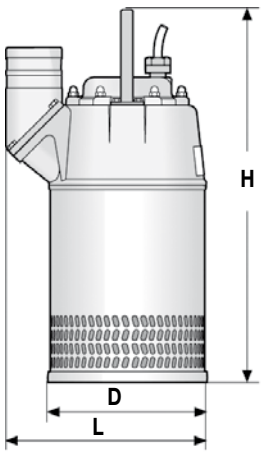

DIMENSIONAL DATA

Type	Cable	Dimensions [mm]			Connection		Solids handling [mm]	Weight [kg]
	[n° x mm²]	D	L	H	[mm]	[in]		
TITAN 2AH 70-45	4 x 2,5	289	367	686	75	3”	7,5x16,5	50

TITAN 2AH

SUBMERSIBLE DRAINAGE PUMP
DN 75 - 3” ALUMINIUM - 2900 rpm

Liquid temperature: 0°C +40°C
Max. ambient temperature: +40°C
(with motor exposed to air)

Power cable: 20 m (H07RN-F)
Maximum immersion depth: 20 m

Accessories see page 69
Special executions on request

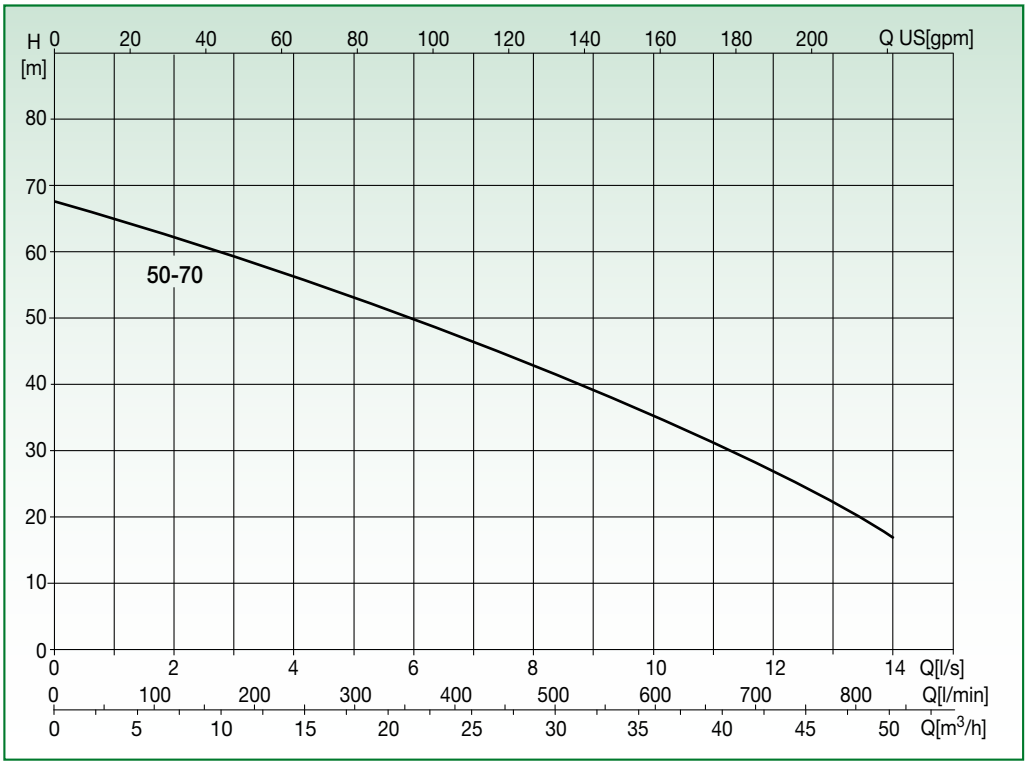

Test to UNI EN ISO 9906 level 2 - Test liquid: water (ρ = 1000 kg/m^3, kinematic viscosity ν = 1 mm^2/s)
Tolerance on performance curves to UNI EN ISO 9906 Annex A

PERFORMANCE DATA

Code	Type	Motor				Flow rate								
		P_{1n}	P_{2n}	V_n	I_n	[l/s]	0	2	4	6	8	10	12	14
		[kW]	[kW]	[V]	[A]	[m^3/h]	0	7	14	22	29	36	43	50,4
10039706	TITAN 2AH 50-70	10,8	9,4	3x400	18	H [m]	68	61	54	50	42	35	28	18

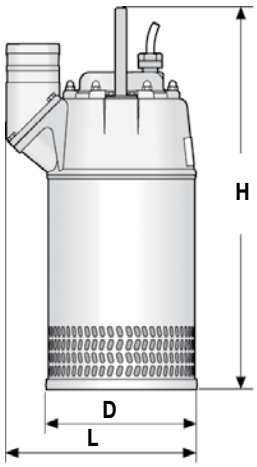

DIMENSIONAL DATA

Type	Cable	Dimensions [mm]			Connection		Solids handling [mm]	Weight [kg]
	[n° x mm^2]	D	L	H	[mm]	[in]		
TITAN 2AH 50-70	4 x 4	289	367	731	75	3”	7,5x16,5	75

TITAN 2AH

SUBMERSIBLE DRAINAGE PUMP
DN 100 - 4” ALUMINIUM - 2900 rpm

Liquid temperature: 0°C +40°C
Max. ambient temperature: +40°C
(with motor exposed to air)

Power cable: 20 m (H07RN-F)
Maximum immersion depth: 20 m

Accessories see page 69
Special executions on request

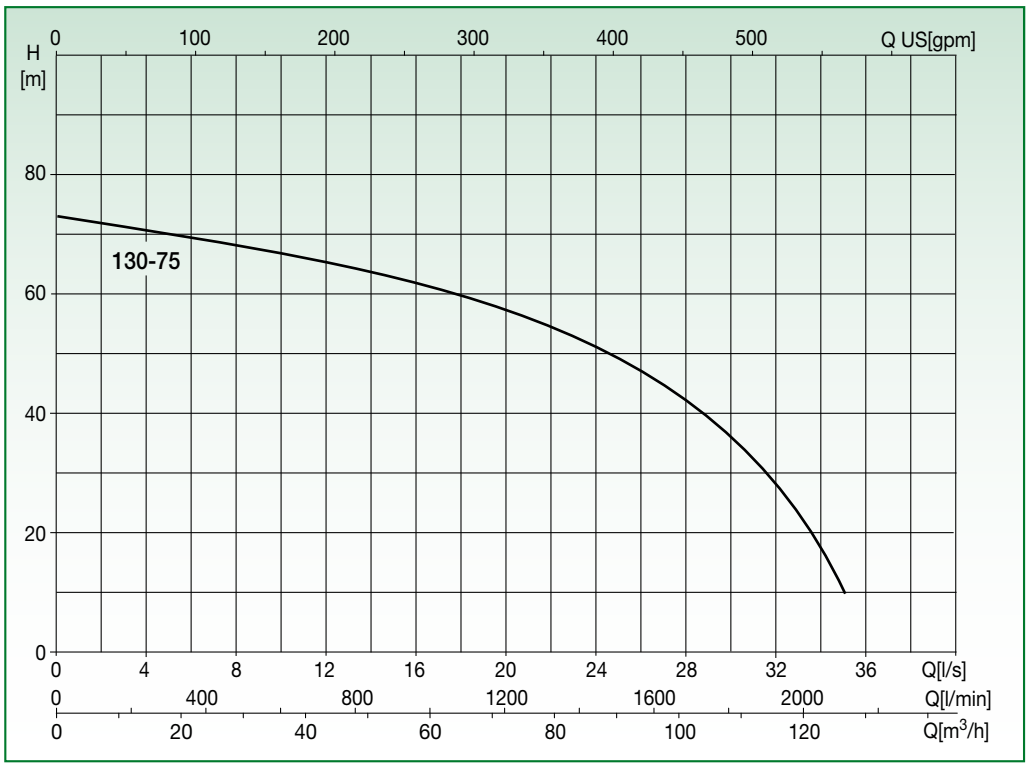

Test to UNI EN ISO 9906 level 2 - Test liquid: water (ρ = 1000 kg/m^3, kinematic viscosity ν = 1 mm^2/s)
Tolerance on performance curves to UNI EN ISO 9906 Annex A

PERFORMANCE DATA

Code	Type	Motor				Flow rate								
		P_{1n}	P_{2n}	V_n	I_n	[l/s]	0	5	10	15	20	25	30	35
		[kW]	[kW]	[V]	[A]	[m^3/h]	0	18	36	54	72	90	108	126
10039709	**TITAN 2AH 130-75**	24	21	3x400	39	**H [m]**	73	70	67	63	57	50	37	10

Star-delta starting

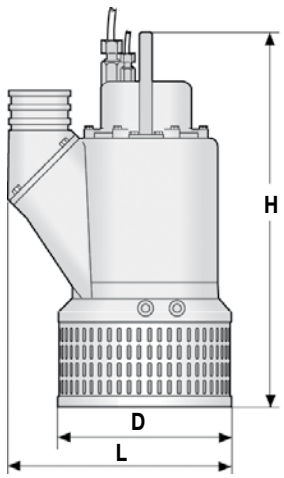

DIMENSIONAL DATA

Type	Cable	Dimensions [mm]			Connection		Solids handling [mm]	Weight [kg]
	[n° x mm^2]	D	L	H	[mm]	[in]		
TITAN 2AH 130-75	2-4 x 6	450	570	915	100	4”	8x34	155

SUBMERSIBLE DRAINAGE PUMPS
CAST IRON
TITAN 2GL

Submersible electric pump with dual external chamber for optimal motor cooling also with low suction levels. Motor body and impeller in GJL-200 cast iron. Motor shaft in AISI 410 stainless steel. Outer jacket in GJL-200 cast iron and open impeller.
Motor with IP68 protection rating. Standard thermal protection device: internal thermal cutout up to 5.5 kW, bimetal sensor from 7.5 kW.

Triple mechanical oil bath seal with inspectable chamber. Primary and secondary seal in silicon carbide plus lip seal for total protection of the motor. Seal leak protection with electrode as from 11 kW.

Bearings prelubricated with grease.
Maximum head: 155 m w.c.
Connections: 2” ÷ 10” (50 mm ÷ 250 mm)
Maximum immersion depth: 20 m
Liquid temperature: 0 °C +40 °C

TITAN 2GL

SUBMERSIBLE DRAINAGE PUMP
DN 50 - 2” CAST IRON - 2900 rpm

Liquid temperature: 0°C +40°C
Max. ambient temperature: +40°C
(with motor exposed to air)

Power cable: 20 m
Maximum immersion depth: 20 m

Accessories see page 69
Special executions on request

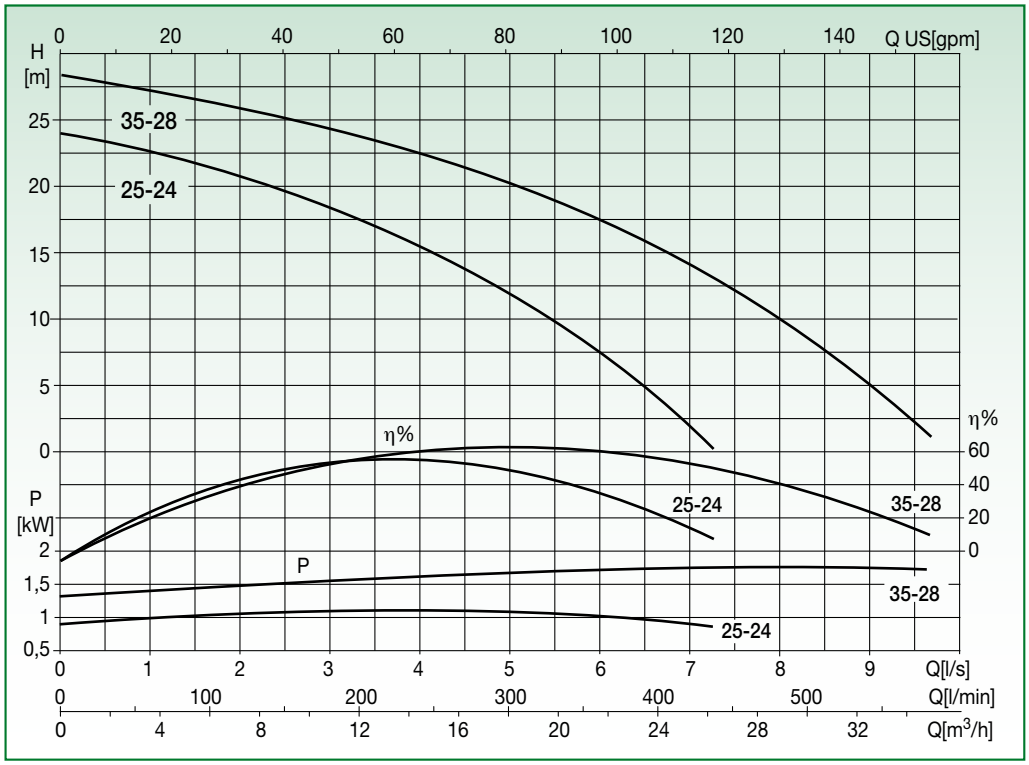

Test to UNI EN ISO 9906 level 2 - Test liquid: water (ρ = 1000 kg/m³, kinematic viscosity ν = 1 mm²/s)
Tolerance on performance curves to UNI EN ISO 9906 Annex A

PERFORMANCE DATA

Code	Type	Motor				Flow rate											
		P_{1n}	P_{2n}	V_n	I_n	[l/s]	0	1	2	3	4	5	6	7	8	9	9,72
		[kW]	[kW]	[V]	[A]	[m³/h]	0	3,6	7,2	10,8	14,4	18	21,6	25,2	28,8	32,4	35
10030933	TITAN 2GL 25-24	1,9	1,5	3x400	3,4	H [m]	24	22,7	20,8	18,3	15,5	12	7,6	2			
10030934	TITAN 2GL 35-28	2,8	2,2	3x400	4,9		28,4	27,2	25,9	24,4	22,5	20,3	17,5	14	10	5	1,2

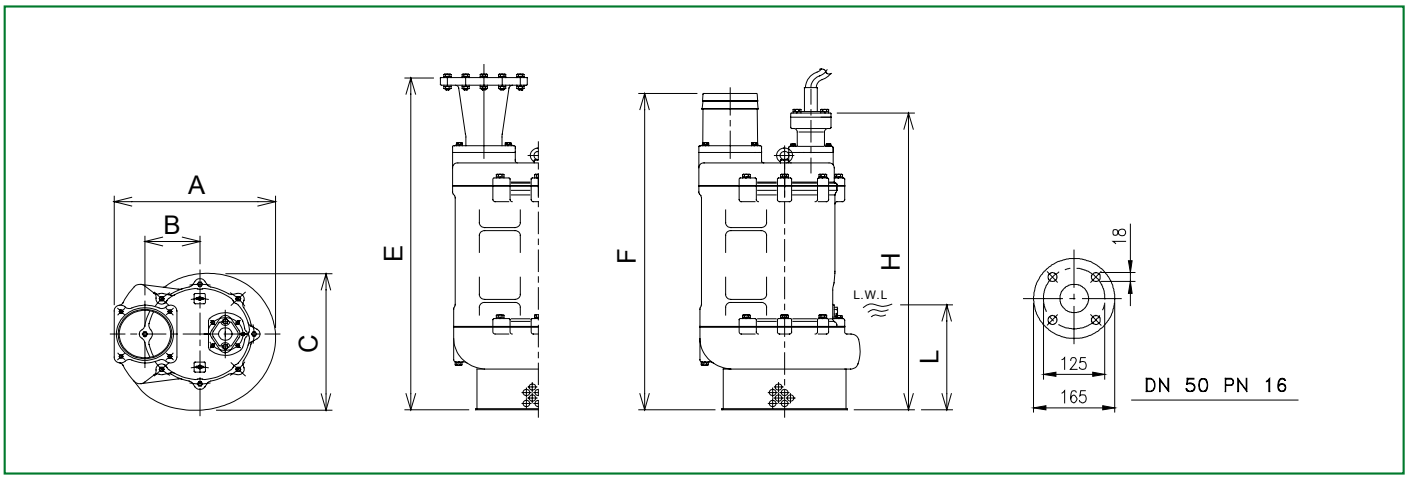

L.W.L. = Lower Water Level

DIMENSIONAL DATA

Type	Cable	Dimensions [mm]							Connection		Solids handling [mm]	Weight [kg]
	[n° x mm²]	A	B	C	E	F	H	L	[mm]	[in]		
TITAN 2GL 25-24	3 x 2	232	77	212	533	538	490	150	50	2”	10	44
TITAN 2GL 35-28	3 x 2	232	77	212	558	563	515	150	50	2”	15	50

TITAN 2GL

SUBMERSIBLE DRAINAGE PUMP
DN 80 - 3” CAST IRON - 2900 rpm

Liquid temperature: 0°C +40°C
Max. ambient temperature: +40°C
(with motor exposed to air)

Power cable: 20 m
Maximum immersion depth: 20 m

Accessories see page 69
Special executions on request

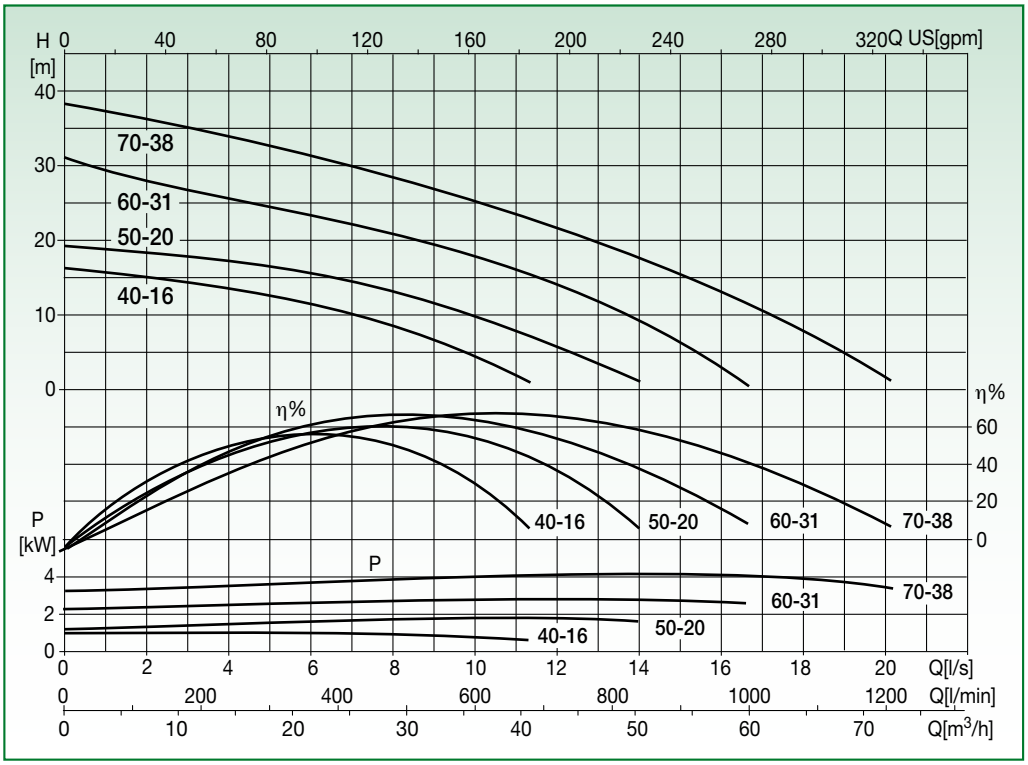

Test to UNI EN ISO 9906 level 2 - Test liquid: water (ρ = 1000 kg/m³, kinematic viscosity ν = 1 mm²/s)
Tolerance on performance curves to UNI EN ISO 9906 Annex A

PERFORMANCE DATA

Code	Type	Motor				Flow rate												
		P_{1n}	P_{2n}	V_n	I_n	[l/s]	0	2	4	6	8	10	11	12	14	16	18	20
		[kW]	[kW]	[V]	[A]	[m³/h]	0	7,2	14,4	21,6	28,8	36	39,6	43,2	50,4	57,6	64,8	72
10030935	TITAN 2GL 40-16	1,9	1,5	3x400	3,4	H [m]	16,2	15	13,6	11,4	8,6	4,5	2					
10030936	TITAN 2GL 50-20	2,8	2,2	3x400	4,9		19,3	18,4	17,3	15,5	13,2	9,8	7,8	5,7	1			
10030938	TITAN 2GL 60-31	4,4	3,7	3x400	8,1		31	27,8	25,5	23,4	20,9	17,8	16	14	9,3	2,8		
10030939	TITAN 2GL 70-38	6,5	5,5	3x400	11,3		38,2	36,2	33,9	31,2	28,4	25,2	23,6	21,6	17,7	13	7,8	1,6

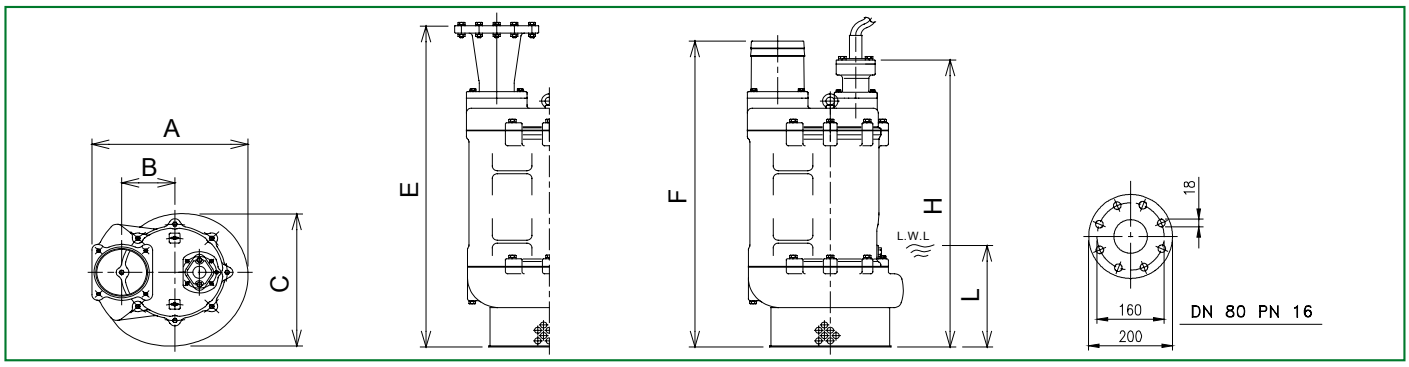

L.W.L. = Lower Water Level

DIMENSIONAL DATA

Type	Cable	Dimensions [mm]							Connection		Solids handling [mm]	Weight [kg]
	[n° x mm²]	A	B	C	E	F	H	L	[mm]	[in]		
TITAN 2GL 40-16	3 x 2	232	77	212	533	538	490	150	80	3”	10	44
TITAN 2GL 50-20	3 x 2	232	77	212	558	563	515	150	80	3”	15	50
TITAN 2GL 60-31	3 x 2	286	105	248	670	630	582	180	80	3”	15	70
TITAN 2GL 70-38	3 x 3,5	286	105	248	720	680	632	180	80	3”	20	83

TITAN 2GL

SUBMERSIBLE DRAINAGE PUMP
DN 100 - 4” CAST IRON - 2900 rpm

Liquid temperature: 0°C +40°C
Max. ambient temperature: +40°C
(with motor exposed to air)

Power cable: 20 m
Maximum immersion depth: 20 m

Accessories see page 69
Special executions on request

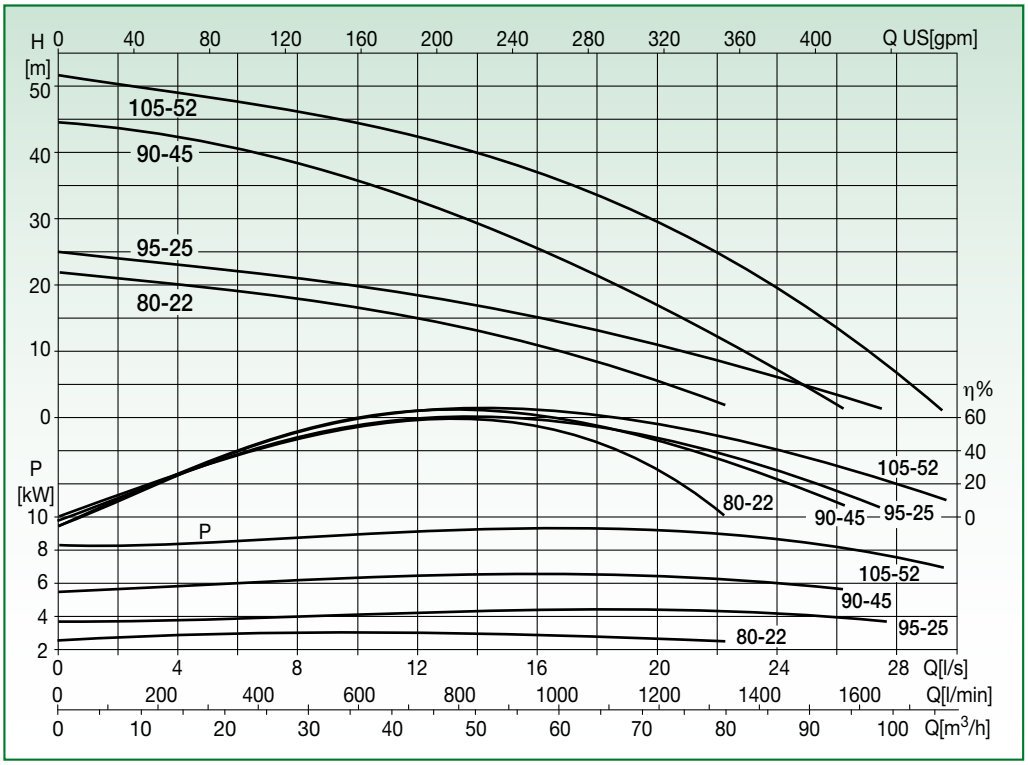

Test to UNI EN ISO 9906 level 2 - Test liquid: water (ρ = 1000 kg/m³, kinematic viscosity ν = 1 mm²/s)
Tolerance on performance curves to UNI EN ISO 9906 Annex A

PERFORMANCE DATA

Code	Type	Motor				Flow rate											
		P_{1n}	P_{2n}	V_n	I_n	[l/s]	0	4	8	12	16	20	22	24	26	28	29,5
		[kW]	[kW]	[V]	[A]	[m³/h]	0	14,4	28,8	43,2	57,6	72	75,6	86,4	93,6	100,8	106,2
10030940	TITAN 2GL 80-22	4,5	3,7	3x400	7,8	H [m]	21,8	20	18	15	11	5,5	2,2				
10030941	TITAN 2GL 95-25	6,5	5,5	3x400	11,3		25	23	21	18,3	15	10,9	8,5	6	3,4		
10030942	TITAN 2GL 90-45	8,7	7,5	3x400	15,2		44,5	42,3	38,3	32,6	25,6	16,9	12	7	1,8		
10030943	TITAN 2GL 105-52	12,7	11	3x400	22		51,5	49	46	42,3	36,8	29,4	24,8	19,5	13,3	6,6	1,2

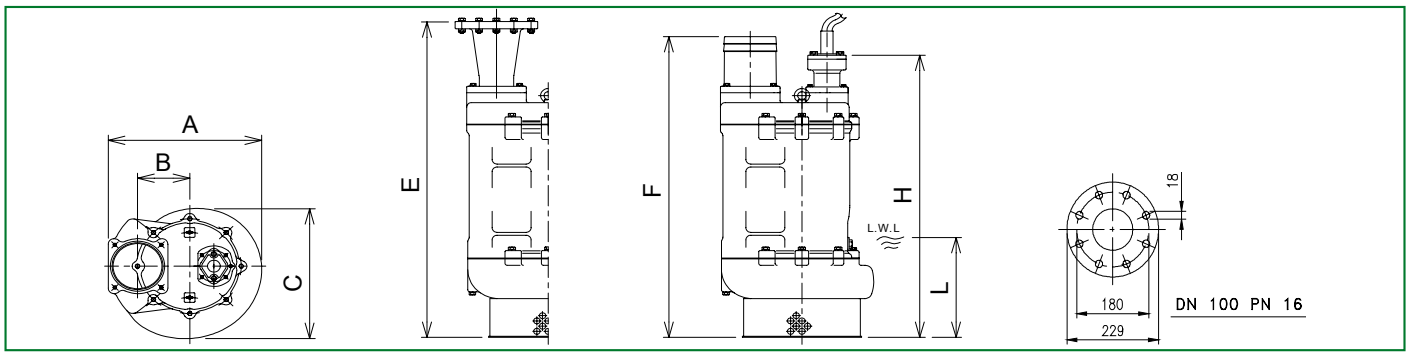

L.W.L. = Lower Water Level

DIMENSIONAL DATA

Type	Cable	Dimensions [mm]							Connection		Solids handling [mm]	Weight [kg]
	[n° x mm²]	A	B	C	E	F	H	L	[mm]	[in]		
TITAN 2GL 80-22	3 x 2	286	105	248	670	645	582	180	100	4”	15	70
TITAN 2GL 95-25	3 x 3,5	286	105	248	720	695	632	180	100	4”	20	83
TITAN 2GL 90-45	3 x 5,5	360	130	322	856	831	815	250	100	4”	20	150
TITAN 2GL 105-52	3 x 8	360	130	322	896	871	855	250	100	4”	25	177

TITAN 2GL

SUBMERSIBLE DRAINAGE PUMP
DN 150 - 6” CAST IRON - 2900 rpm

Liquid temperature: 0°C +40°C
Max. ambient temperature: +40°C
(with motor exposed to air)

Power cable: 20 m
Maximum immersion depth: 20 m

Accessories see page 69
Special executions on request

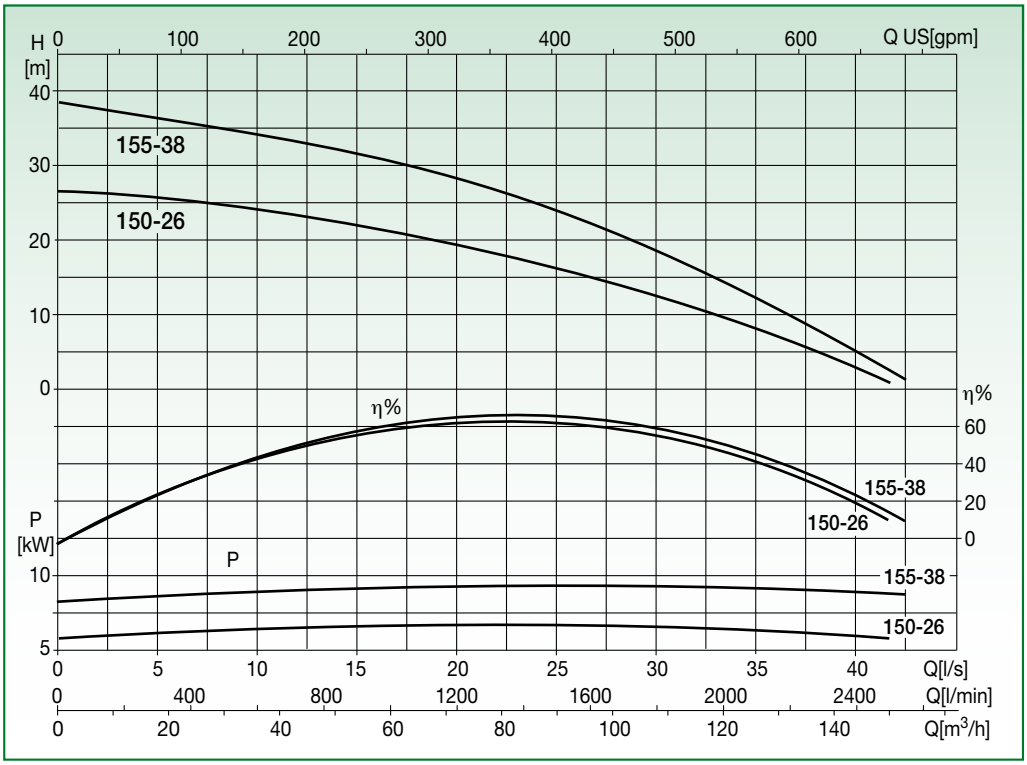

Test to UNI EN ISO 9906 level 2 - Test liquid: water (ρ = 1000 kg/m³, kinematic viscosity ν = 1 mm²/s)
Tolerance on performance curves to UNI EN ISO 9906 Annex A

PERFORMANCE DATA

Code	Type	Motor				Flow rate											
		P_{1n}	P_{2n}	V_n	I_n	[l/s]	0	5	10	15	20	25	30	35	40	41,6	43
		[kW]	[kW]	[V]	[A]	[m³/h]	0	18	36	54	72	90	108	126	144	150	155
10030945	TITAN 2GL 150-26	8,7	7,5	3x400	15,2	H [m]	26,3	25,7	24	22	19,3	16,2	12,5	8,2	2,8	0,8	
10030946	TITAN 2GL 155-38	12,7	11	3x400	22		38	36,2	34	31,6	28,2	23,9	18,5	12,3	5,2	2,5	1,4

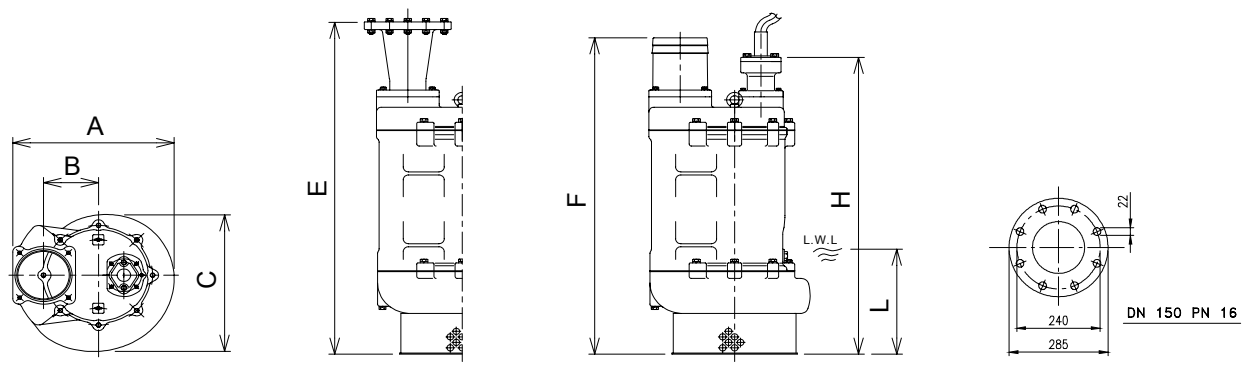

L.W.L. = Lower Water Level

DIMENSIONAL DATA

Type	Cable	Dimensions [mm]							Connection		Solids handling [mm]	Weight [kg]
	[n° x mm²]	A	B	C	E	F	H	L	[mm]	[in]		
TITAN 2GL 150-26	3 x 5,5	360	130	322	946	887	815	250	150	6”	20	150
TITAN 2GL 155-38	3 x 8	360	130	322	986	927	855	250	150	6”	25	177

SUBMERSIBLE DRAINAGE PUMPS
CAST IRON
TITAN 2GM

Submersible electric pump with dual external chamber for optimal motor cooling also with low suction levels. Motor body and impeller in GJL-200 cast iron. Motor shaft in AISI 410 stainless steel.
Outer jacket in steel and closed impeller. Motor with IP68 protection rating. Standard thermal protection device: internal thermal cutout up to 5.5 kW, bimetal sensor from 7.5 kW.

Triple mechanical oil bath seal with inspectable chamber. Primary and secondary seal in silicon carbide plus lip seal for total protection of the motor. Seal leak protection with electrode as from 11 kW.

Bearings prelubricated with grease.
Maximum head: 155 m w.c.
Connections: 2” ÷ 10” (50 mm ÷ 250 mm)
Maximum immersion depth: 20 m
Liquid temperature: 0 °C +40 °C

TITAN 2GM

SUBMERSIBLE DRAINAGE PUMP
DN 100 - 4” CAST IRON - 2900 rpm

Liquid temperature: 0°C +40°C
Max. ambient temperature: +40°C
(with motor exposed to air)

Power cable: 20 m
Maximum immersion depth: 20 m

Accessories see page 69
Special executions on request

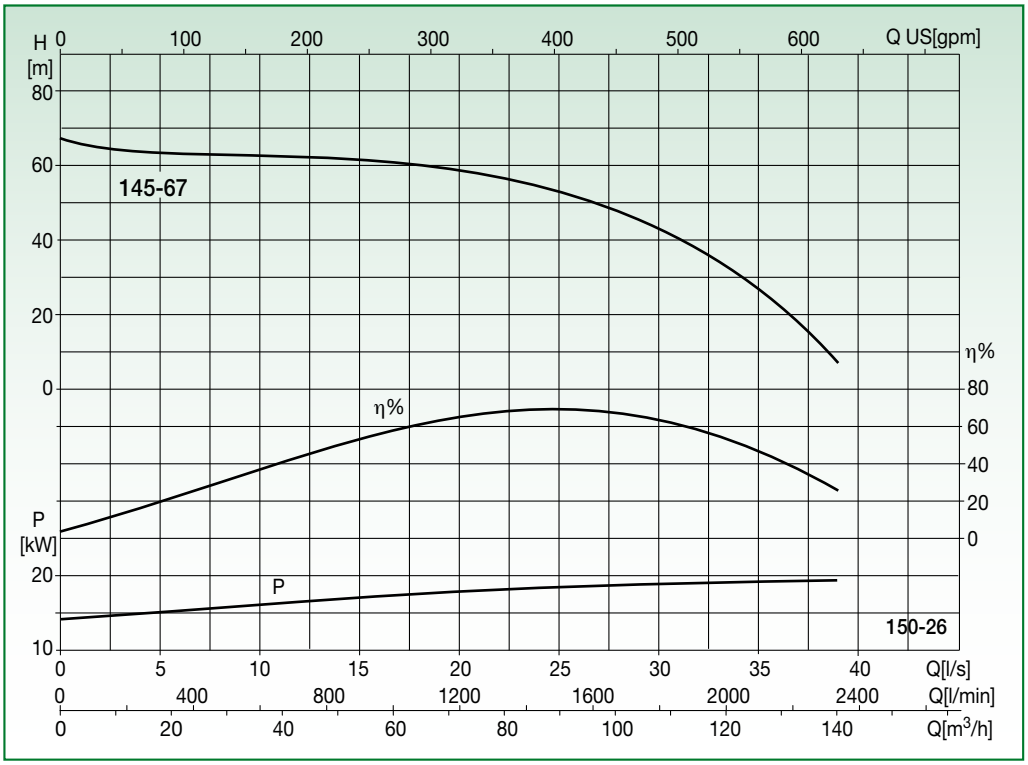

Test to UNI EN ISO 9906 level 2 - Test liquid: water (ρ = 1000 kg/m^3, kinematic viscosity ν = 1 mm^2/s)
Tolerance on performance curves to UNI EN ISO 9906 Annex A

PERFORMANCE DATA

Code	Type	Motor				Flow rate									
		P_{1n}	P_{2n}	V_n	I_n	[l/s]	0	5	10	15	20	25	30	35	39
		[kW]	[kW]	[V]	[A]	[m³/h]	0	18	36	54	72	90	108	126	140
10030967	TITAN 2GM 145-67	24,3	22	3x400	41	H [m]	67	63,2	62,5	61,4	58,5	52,8	42,8	26,8	7

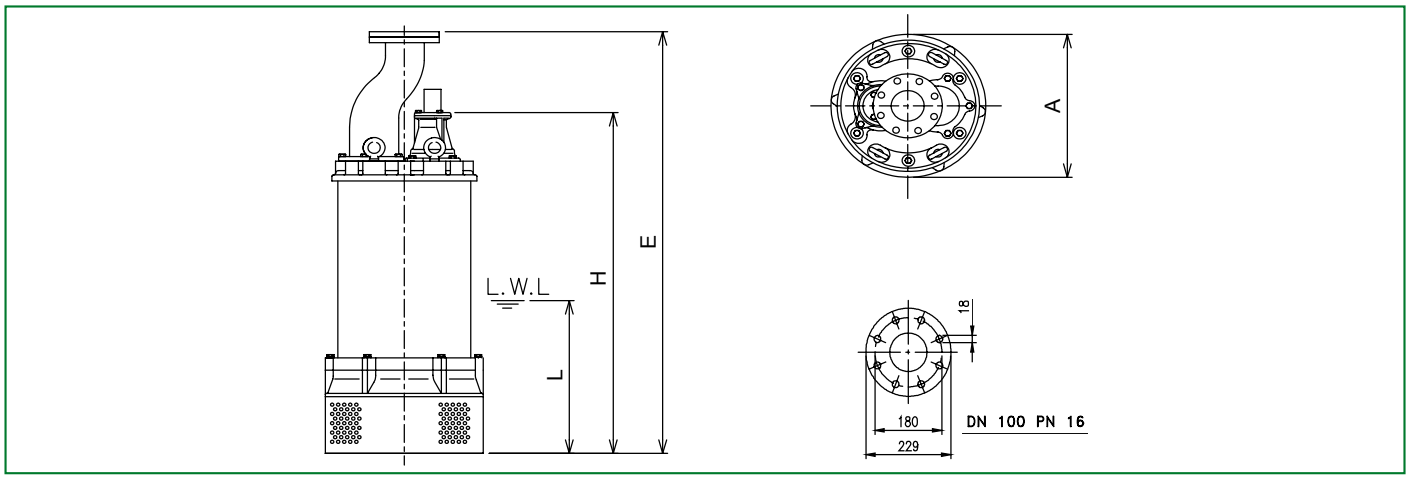

L.W.L. = Lower Water Level

DIMENSIONAL DATA

Type	Cable	Dimensions [mm]				Connection		Solids handling [mm]	Weight [kg]
	[n° x mm²]	A	E	H	L	[mm]	[in]		
TITAN 2GM 145-67	3 x 8	470	1350	1200	300	100	4”	10	500

TITAN 2GM

SUBMERSIBLE DRAINAGE PUMP
DN 150 - 6” CAST IRON - 2900 rpm

Liquid temperature: 0°C +40°C
Max. ambient temperature: +40°C
(with motor exposed to air)

Power cable: 20 m
Maximum immersion depth: 20 m

Accessories see page 69
Special executions on request

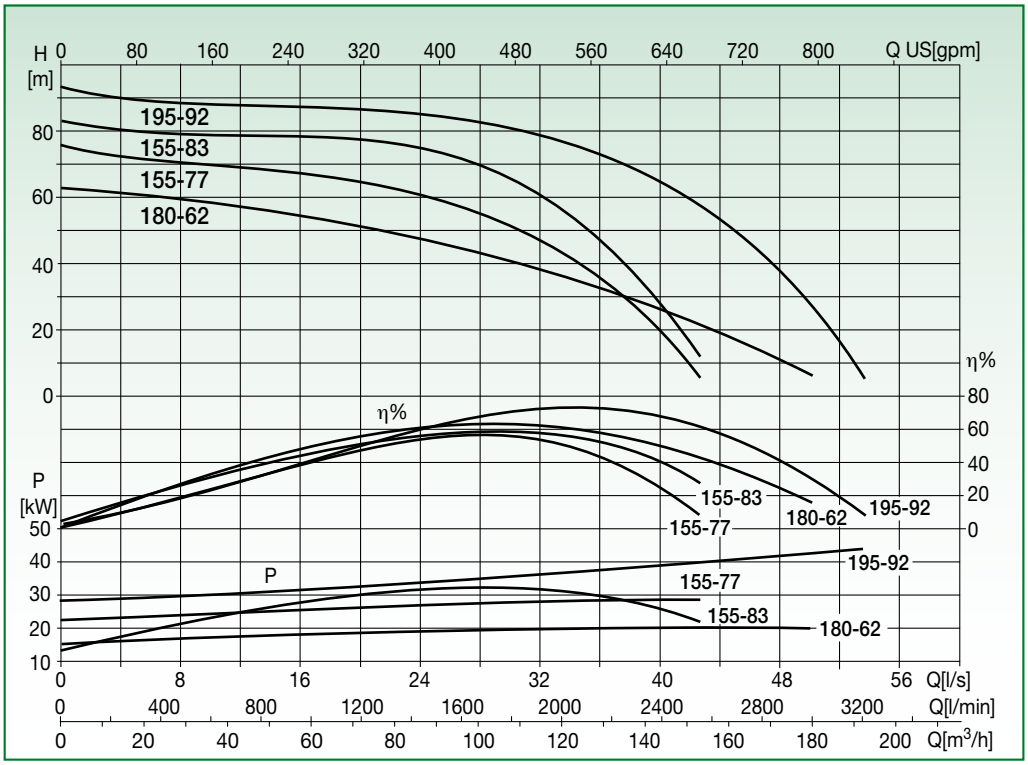

Test to UNI EN ISO 9906 level 2 - Test liquid: water (ρ = 1000 kg/m³, kinematic viscosity ν = 1 mm²/s)
Tolerance on performance curves to UNI EN ISO 9906 Annex A

PERFORMANCE DATA

Code	Type	Motor				Flow rate										
		P_{1n}	P_{2n}	V_n	I_n	[l/s]	0	8	16	24	32	40	43	48	50	54
		[kW]	[kW]	[V]	[A]	[m³/h]	0	29	58	86	115	144	155	173	180	194
10032481	TITAN 2GM 180-62	24,3	22	3x400	41	H [m]	62	59,5	54,5	47	38	25,8	20	11	6	
10030968	TITAN 2GM 155-77	33,4	30	3x400	56		77	70,5	67,3	60,5	46,8	19,7	5,6			
10032482	TITAN 2GM 155-83	40,5	37	3x400	68		83	79	78,2	74,6	60,5	27,8	12			
10032483	TITAN 2GM 195-92	49,7	45	3x400	83		93	88,3	87	85	78,6	64,5	58	37,9	27,4	5,6

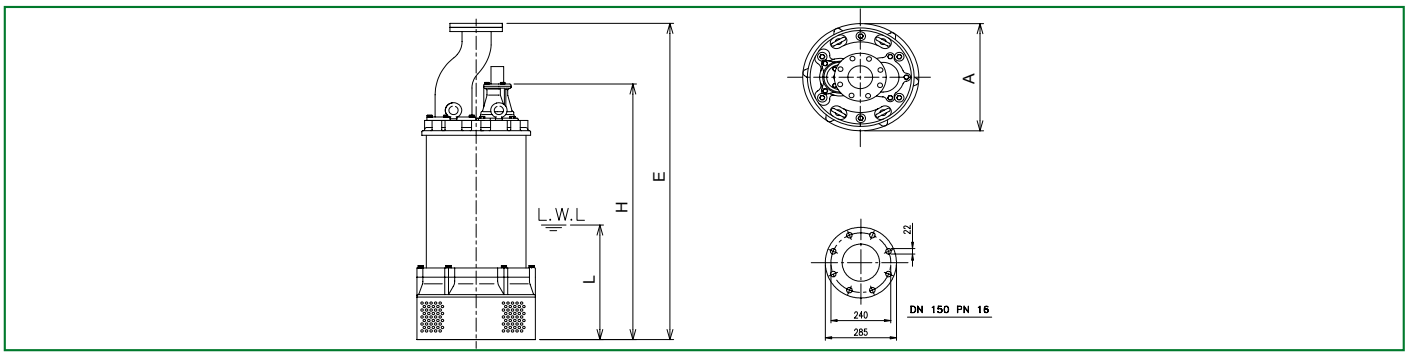

L.W.L. = Lower Water Level

DIMENSIONAL DATA

Type	Cable	Dimensions [mm]				Connection		Solids handling [mm]	Weight [kg]
	[n° x mm²]	A	E	H	L	[mm]	[in]		
TITAN 2GM 180-62	6 x 8	470	1350	1200	300	150	6”	15	500
TITAN 2GM 155-77	6 x 14	470	1350	1200	300	150	6”	10	530
TITAN 2GM 155-83	6 x 14	620	1650	1450	350	150	6”	15	770
TITAN 2GM 195-92	6 x 22	620	1650	1450	350	150	6”	15	800

TITAN 2GM

SUBMERSIBLE DRAINAGE PUMP
DN 200 - 8” CAST IRON - 2900 rpm

Liquid temperature: 0°C +40°C
Max. ambient temperature: +40°C
(with motor exposed to air)

Power cable: 20 m
Maximum immersion depth: 20 m

Accessories see page 69
Special executions on request

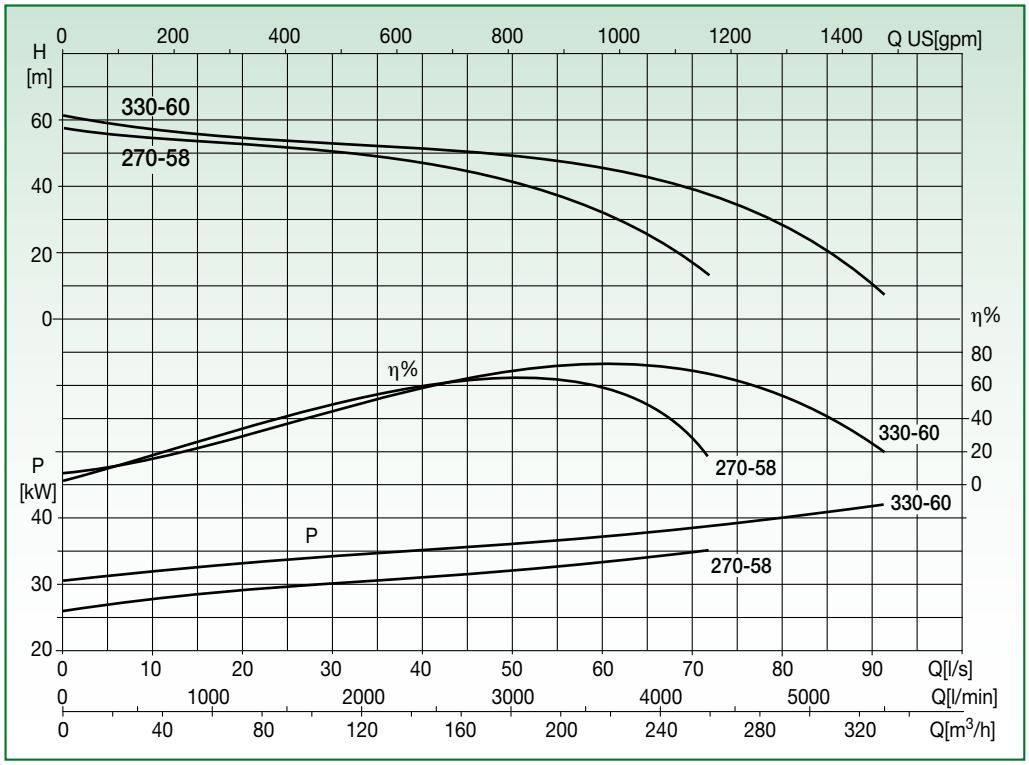

Test to UNI EN ISO 9906 level 2 - Test liquid: water (ρ = 1000 kg/m³, kinematic viscosity ν = 1 mm²/s)
Tolerance on performance curves to UNI EN ISO 9906 Annex A

PERFORMANCE DATA

Code	Type	Motor				Flow rate										
		P_{1n}	P_{2n}	V_n	I_n	[l/s]	0	10	20	30	40	50	60	70	80	90
		[kW]	[kW]	[V]	[A]	[m³/h]	0	36	72	108	144	180	216	252	288	324
10032484	TITAN 2GM 270-58	40,5	37	3x400	68	H [m]	58	54	53	50,2	47	41,5	32	16		
10032485	TITAN 2GM 330-60	49,7	45	3x400	83		61	57	54,7	53	51,5	49	45,5	39	28	10

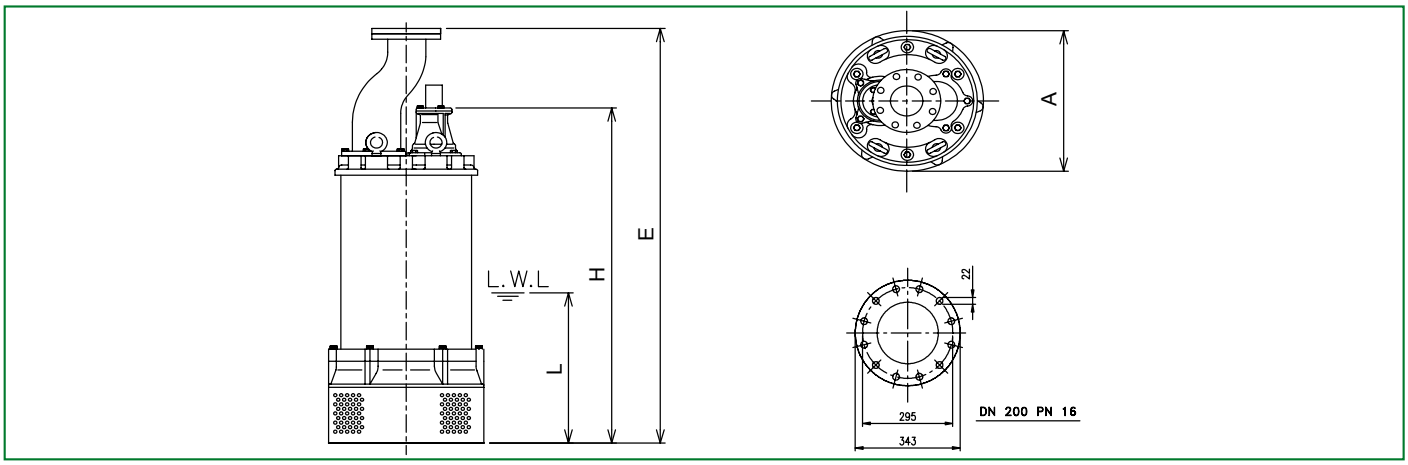

L.W.L. = Lower Water Level

DIMENSIONAL DATA

Type	Cable	Dimensions [mm]				Connection		Solids handling [mm]	Weight [kg]
	[n° x mm²]	A	E	H	L	[mm]	[in]		
TITAN 2GM 270-58	6 x 14	620	1650	1450	350	200	8”	30	770
TITAN 2GM 330-60	6 x 22	620	1650	1450	350	200	8”	30	800

SUBMERSIBLE DRAINAGE PUMPS
CAST IRON
TITAN 2GH

Submersible electric pump with dual external chamber for optimal motor cooling also with low suction levels. Motor body and impeller in GJL-200 cast iron. Motor shaft in AISI 410 stainless steel.
Outer jacket in steel and closed impeller. Motor with IP68 protection rating. Standard thermal protection device: internal thermal cutout up to 5.5 kW, bimetal sensor from 7.5 kW.

Triple mechanical oil bath seal with inspectable chamber. Primary and secondary seal in silicon carbide plus lip seal for total protection of the motor. Seal leak protection with electrode as from 11 kW.

Bearings prelubricated with grease.
Maximum head: 155 m w.c.
Connections: 2” ÷ 10” (50 mm ÷ 250 mm)
Maximum immersion depth: 20 m
Liquid temperature: 0 °C +40 °C

TITAN 2GH

SUBMERSIBLE DRAINAGE PUMP
DN 50 - 2” CAST IRON - 2900 rpm

Liquid temperature: 0°C +40°C
Max. ambient temperature: +40°C
(with motor exposed to air)

Power cable: 20 m
Maximum immersion depth: 20 m

Accessories see page 69
Special executions on request

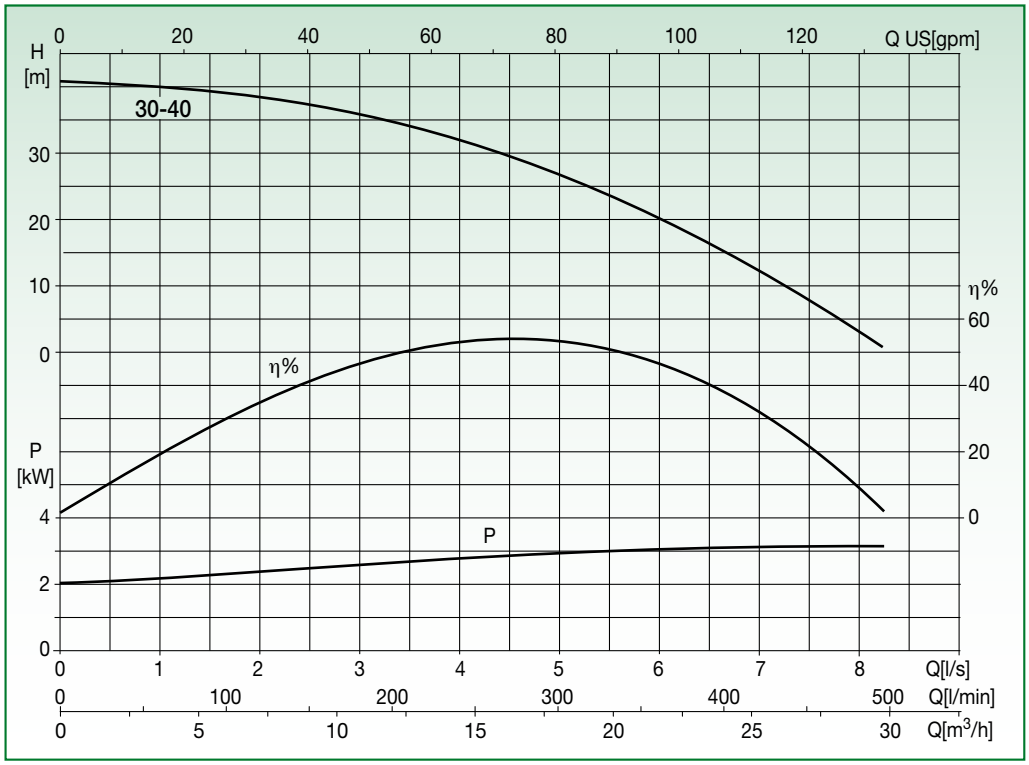

Test to UNI EN ISO 9906 level 2 - Test liquid: water (ρ = 1000 kg/m³, kinematic viscosity ν = 1 mm²/s)
Tolerance on performance curves to UNI EN ISO 9906 Annex A

PERFORMANCE DATA

Code	Type	Motor				Flow rate									
		P_{1n}	P_{2n}	V_n	I_n	[l/s]	0	1	2	3	4	5	6	7	8
		[kW]	[kW]	[V]	[A]	[m³/h]	0	3,6	7	11	14	18	22	25	29
10032477	TITAN 2GH 30-40	4,5	3,7	3x400	7,8	H [m]	40,5	40	39	36	32	27	20	12	3

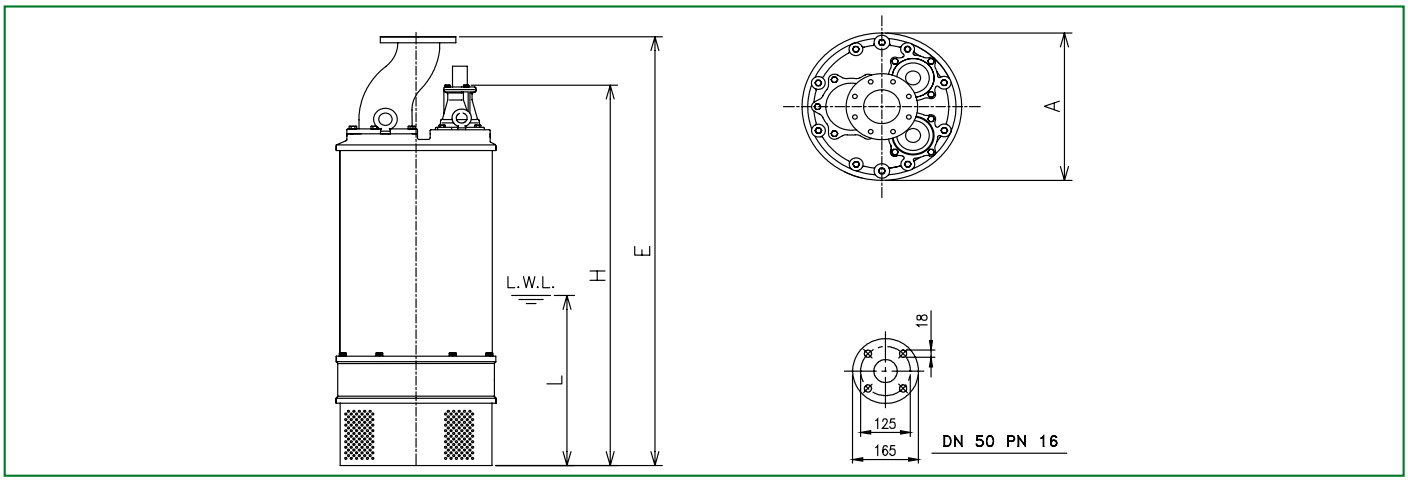

L.W.L. = Lower Water Level

DIMENSIONAL DATA

Type	Cable	Dimensions [mm]				Connection		Solids handling [mm]	Weight [kg]
	[n° x mm²]	A	E	H	L	[mm]	[in]		
TITAN 2GH 30-40	3 x 3,5	290	698	760	360	50	2”	10	150

TITAN 2GH

SUBMERSIBLE DRAINAGE PUMP
DN 50 - 2” CAST IRON - 2900 rpm

Liquid temperature: 0°C +40°C
Max. ambient temperature: +40°C
(with motor exposed to air)

Power cable: 20 m
Maximum immersion depth: 20 m

Accessories see page 69
Special executions on request

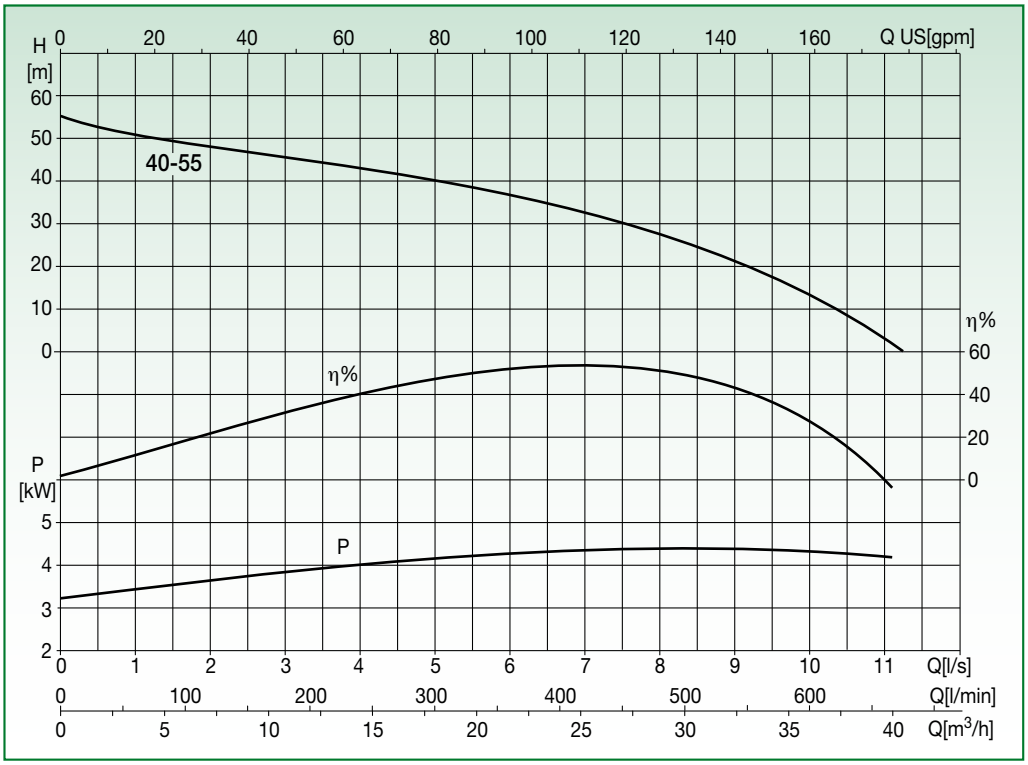

Test to UNI EN ISO 9906 level 2 - Test liquid: water (ρ = 1000 kg/m³, kinematic viscosity ν = 1 mm²/s)
Tolerance on performance curves to UNI EN ISO 9906 Annex A

PERFORMANCE DATA

Code	Type	Motor				Flow rate							
		P_{1n}	P_{2n}	V_n	I_n	[l/s]	0	2	4	6	8	10	11
		[kW]	[kW]	[V]	[A]	[m³/h]	0	7	14	22	29	36	43
10030969	TITAN 2GH 40-55	6,5	5,5	3x400	11,3	H [m]	55	47,8	42,8	36,5	27,5	13	2,8

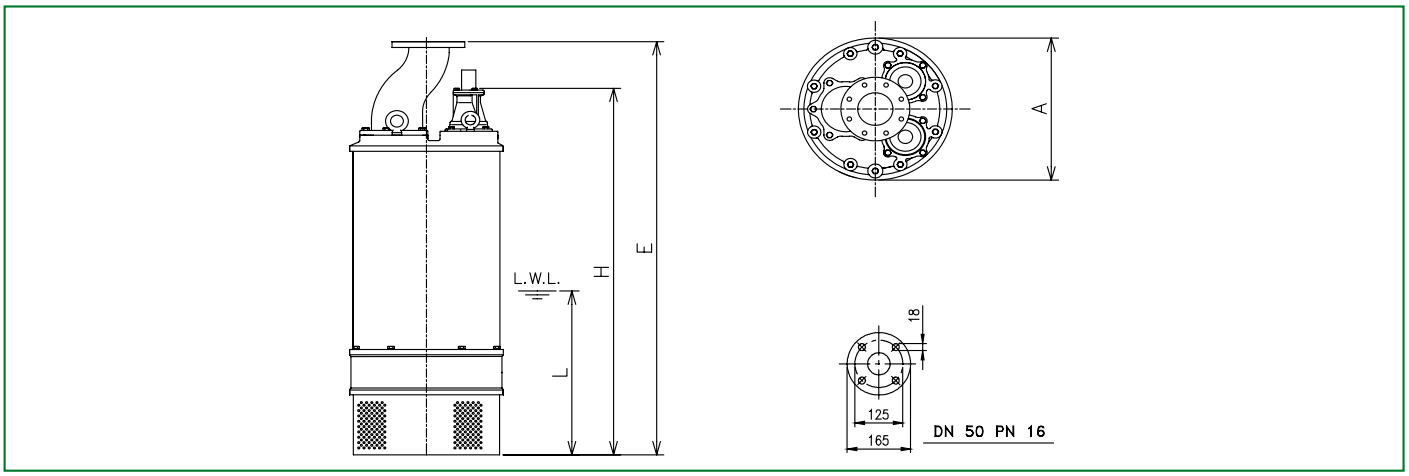

L.W.L. = Lower Water Level

DIMENSIONAL DATA

Type	Cable	Dimensions [mm]				Connection		Solids handling [mm]	Weight [kg]
	[n° x mm²]	A	E	H	L	[mm]	[in]		
TITAN 2GH 40-55	3 x 3,5	290	698	760	360	50	2”	10	150

TITAN 2GH

SUBMERSIBLE DRAINAGE PUMP
DN 80 - 3” CAST IRON - 2900 rpm

Liquid temperature: 0°C +40°C
Max. ambient temperature: +40°C
(with motor exposed to air)

Power cable: 20 m
Maximum immersion depth: 20 m

Accessories see page 69
Special executions on request

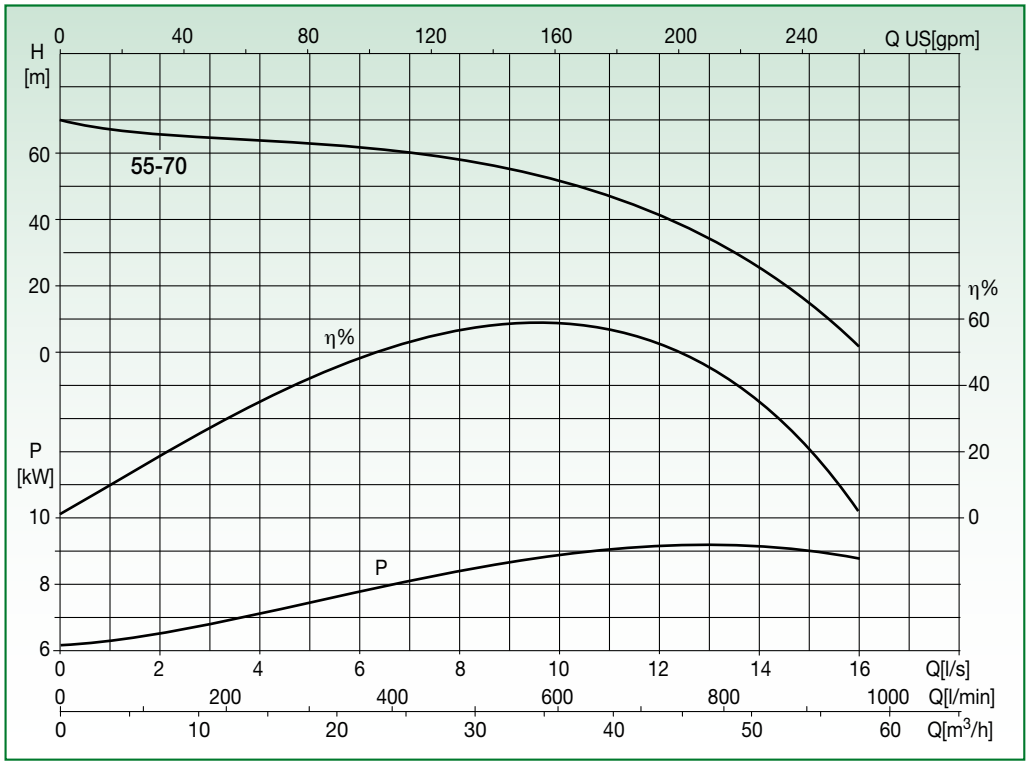

Test to UNI EN ISO 9906 level 2 - Test liquid: water (ρ = 1000 kg/m³, kinematic viscosity ν = 1 mm²/s)
Tolerance on performance curves to UNI EN ISO 9906 Annex A

PERFORMANCE DATA

Code	Type	Motor				Flow rate									
		P_{1n}	P_{2n}	V_n	I_n	[l/s]	0	2	4	6	8	10	12	14	16
		[kW]	[kW]	[V]	[A]	[m³/h]	0	7	14	22	29	36	43	50	58
10032478	TITAN 2GH 55-70	12,7	11	3x400	22	H [m]	70	65,5	64	61,5	57,8	51,5	41,4	25,3	1,5

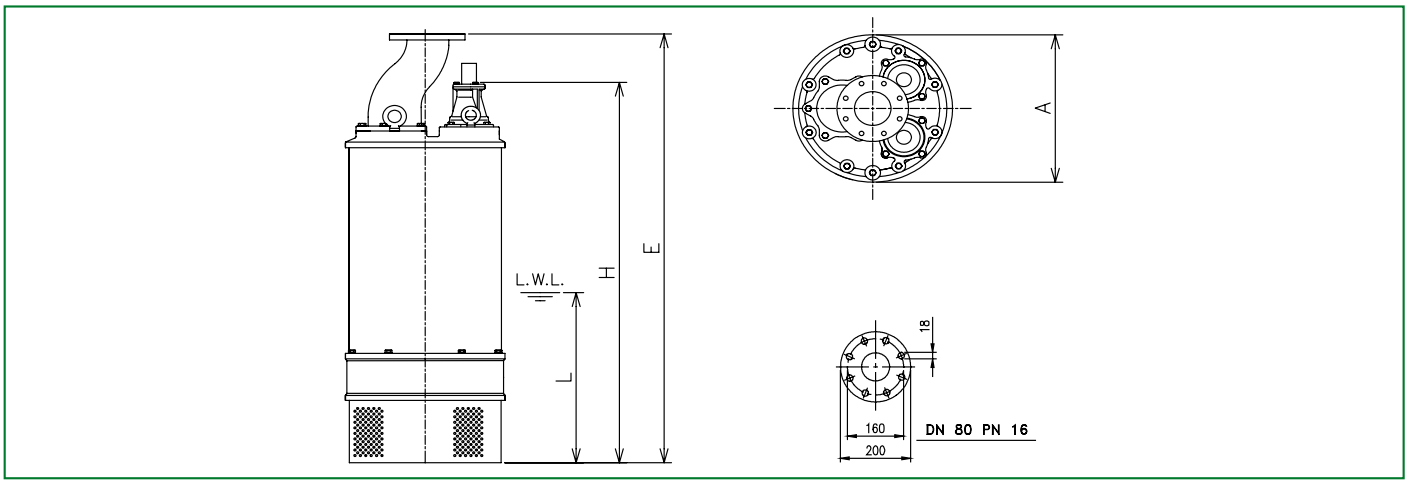

L.W.L. = Lower Water Level

DIMENSIONAL DATA

Type	Cable	Dimensions [mm]				Connection		Solids handling [mm]	Weight [kg]
	[n° x mm²]	A	E	H	L	[mm]	[in]		
TITAN 2GH 55-70	3 x 8	335	970	920	500	80	3”	15	235

TITAN 2GH

SUBMERSIBLE DRAINAGE PUMP
DN 100 - 4” CAST IRON - 2900 rpm

Liquid temperature: 0°C +40°C
Max. ambient temperature: +40°C
(with motor exposed to air)

Power cable: 20 m
Maximum immersion depth: 20 m

Accessories see page 69
Special executions on request

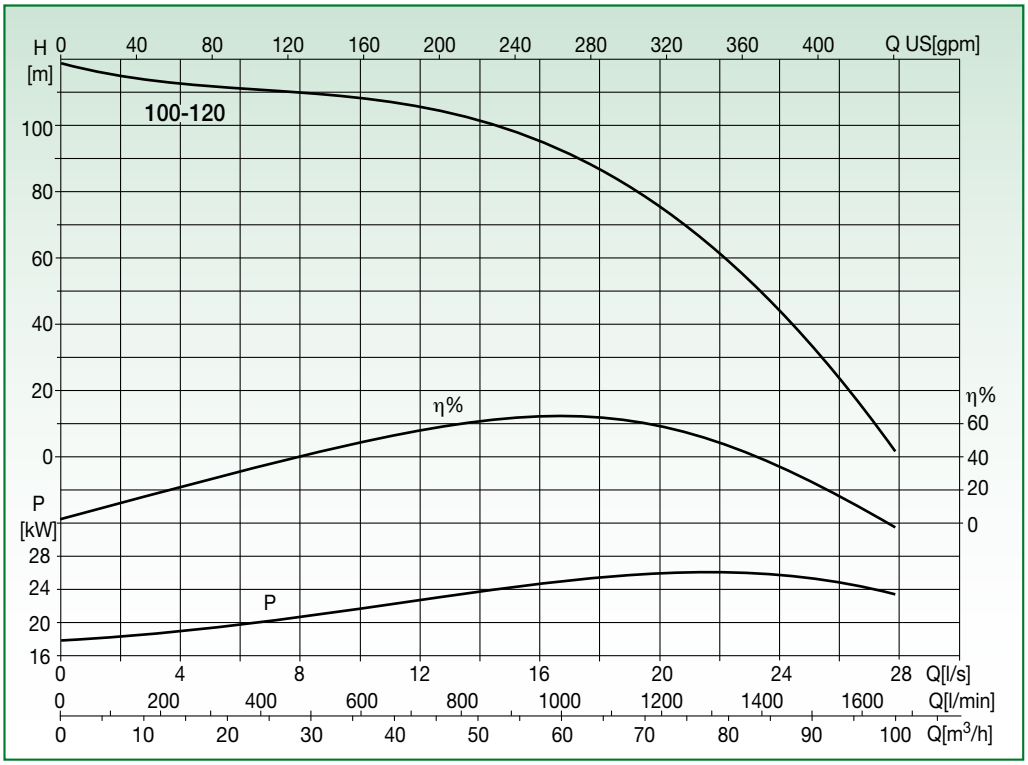

Test to UNI EN ISO 9906 level 2 - Test liquid: water (ρ = 1000 kg/m³, kinematic viscosity ν = 1 mm²/s)
Tolerance on performance curves to UNI EN ISO 9906 Annex A

PERFORMANCE DATA

Code	Type	Motor				Flow rate								
		P_{1n}	P_{2n}	V_n	I_n	[l/s]	0	4	8	12	16	20	24	27,8
		[kW]	[kW]	[V]	[A]	[m³/h]	0	14	29	43	58	72	86	100
10032479	TITAN 2GH 100-120	33,4	30	3x400	56	H [m]	119	112,4	110	105,5	95,4	75,3	44	1,5

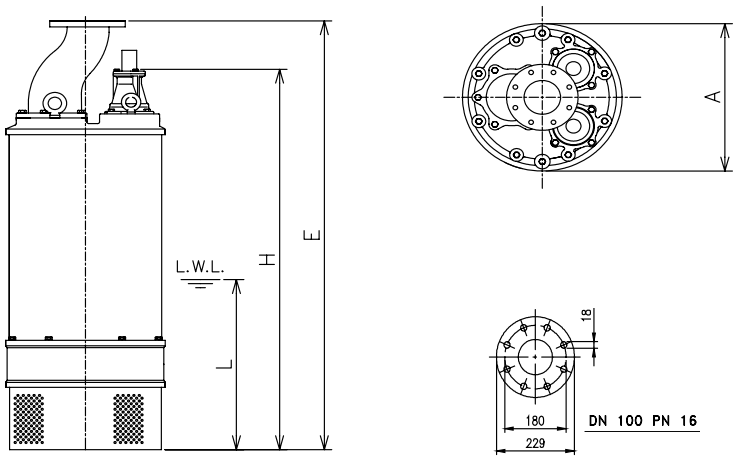

L.W.L. = Lower Water Level

DIMENSIONAL DATA

Type	Cable	Dimensions [mm]				Connection		Solids handling [mm]	Weight [kg]
	[n° x mm²]	A	E	H	L	[mm]	[in]		
TITAN 2GH 100-120	6 x 14	470	1415	1183	660	100	4”	15	560

TITAN 2GH

SUBMERSIBLE DRAINAGE PUMP
DN 150 - 6” CAST IRON - 2900 rpm

Liquid temperature: 0°C +40°C
Max. ambient temperature: +40°C
(with motor exposed to air)

Power cable: 20 m
Maximum immersion depth: 20 m

Accessories see page 69
Special executions on request

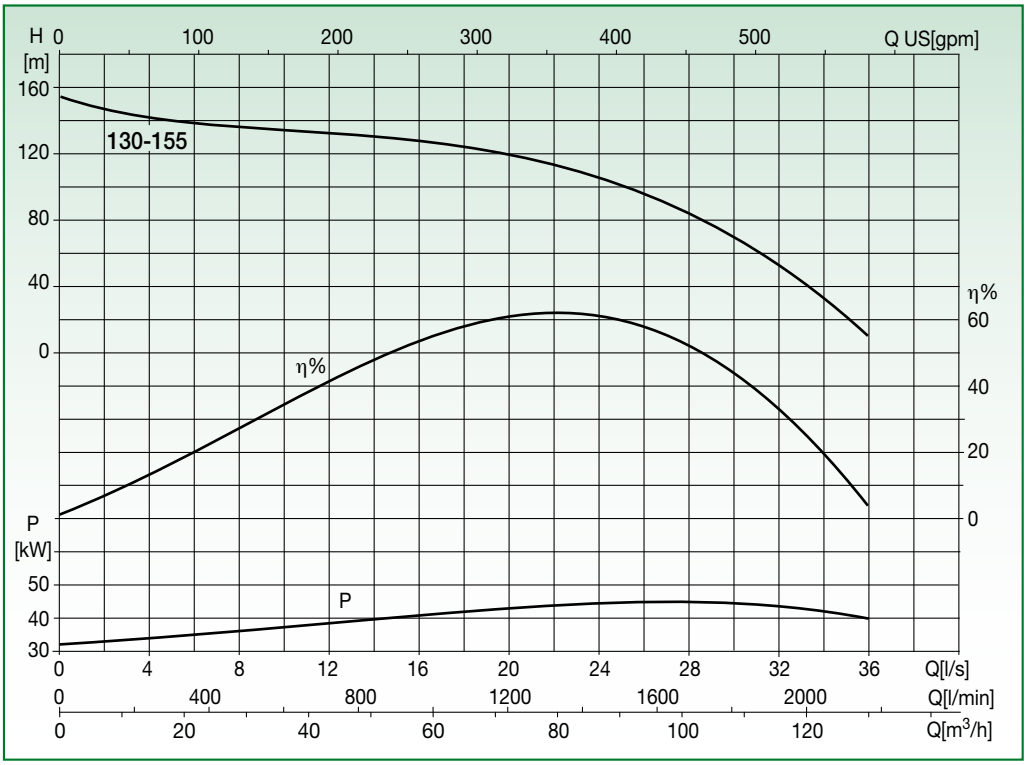

Test to UNI EN ISO 9906 level 2 - Test liquid: water (ρ = 1000 kg/m³, kinematic viscosity ν = 1 mm²/s)
Tolerance on performance curves to UNI EN ISO 9906 Annex A

PERFORMANCE DATA

Code	Type	Motor				Flow rate										
		P_{1n}	P_{2n}	V_n	I_n	[l/s]	0	4	8	12	16	20	24	28	32	36
		[kW]	[kW]	[V]	[A]	[m³/h]	0	14	29	43	58	72	86	101	115	130
10032480	TITAN 2GH 130-155	60,5	55	3x400	101	H [m]	155	141,5	136	132,6	127,8	119	105,3	83,6	53	10

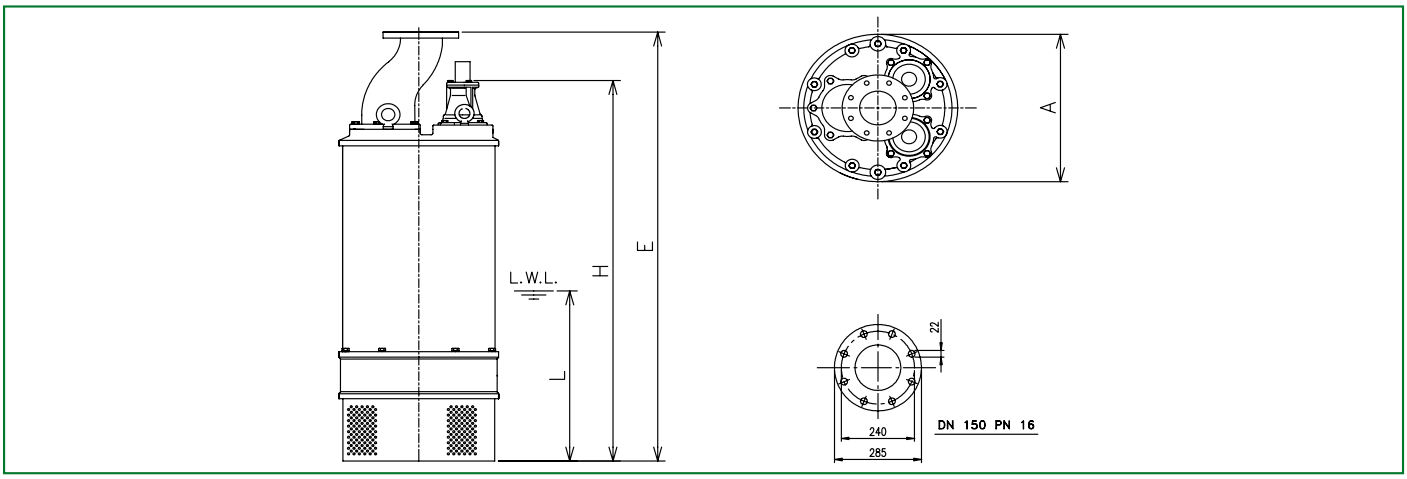

L.W.L. = Lower Water Level

DIMENSIONAL DATA

Type	Cable	Dimensions [mm]				Connection		Solids handling [mm]	Weight [kg]
	[n° x mm²]	A	E	H	L	[mm]	[in]		
TITAN 2GH 130-155	6 x 22	520	1600	1370	800	150	6”	20	850

SUBMERSIBLE DRAINAGE PUMPS
CAST IRON
TITAN 4GL

Submersible electric pump with dual external chamber for optimal motor cooling also with low suction levels. Motor body and impeller in GJL-200 cast iron. Motor shaft in AISI 410 stainless steel. Outer jacket in GJL-200 cast iron and open impeller.
Motor with IP68 protection rating. Standard thermal protection device: internal thermal cutout up to 5.5 kW, bimetal sensor from 7.5 kW.

Triple mechanical oil bath seal with inspectable chamber. Primary and secondary seal in silicon carbide plus lip seal for total protection of the motor. Seal leak protection with electrode as from 11 kW.

Bearings prelubricated with grease.
Maximum head: 155 m w.c.
Connections: 2” ÷ 10” (50 mm ÷ 250 mm)
Maximum immersion depth: 20 m
Liquid temperature: 0 °C +40 °C

TITAN 4GL

SUBMERSIBLE DRAINAGE PUMP
DN 80 - 3” CAST IRON - 1450 rpm

Liquid temperature: 0°C +40°C
Max. ambient temperature: +40°C
(with motor exposed to air)

Power cable: 20 m
Maximum immersion depth: 20 m

Accessories see page 69
Special executions on request

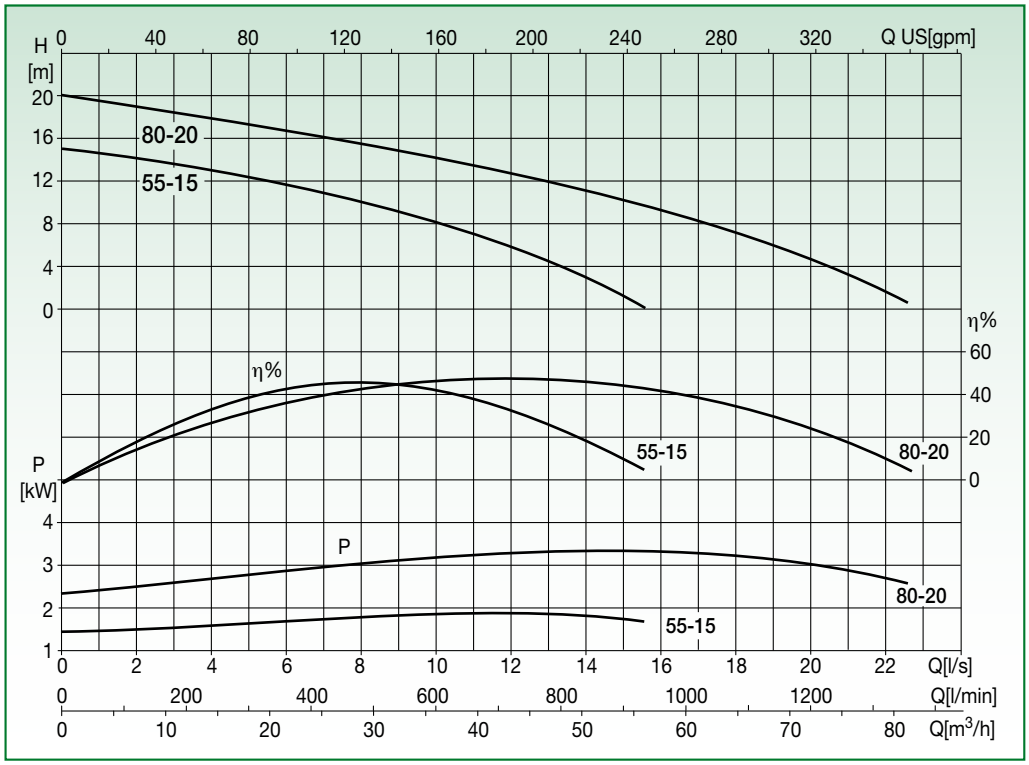

Test to UNI EN ISO 9906 level 2 - Test liquid: water (ρ = 1000 kg/m³, kinematic viscosity ν = 1 mm²/s)
Tolerance on performance curves to UNI EN ISO 9906 Annex A

PERFORMANCE DATA

Code	Type	Motor				Flow rate												
		P_{1n}	P_{2n}	V_n	I_n	[l/s]	0	2	4	6	8	10	12	14	16	18	20	22
		[kW]	[kW]	[V]	[A]	[m³/h]	0	7	14	22	29	36	43	50	58	65	72	79
10030947	TITAN 4GL 55-15	2,7	2,2	3x400	5	H [m]	15	14	13	11,5	10	8	5,7	3				
10030948	TITAN 4GL 80-20	4,4	3,7	3x400	8,1		20	19	18	16,5	15,5	14	12,5	11	9,2	7	4,5	1,5

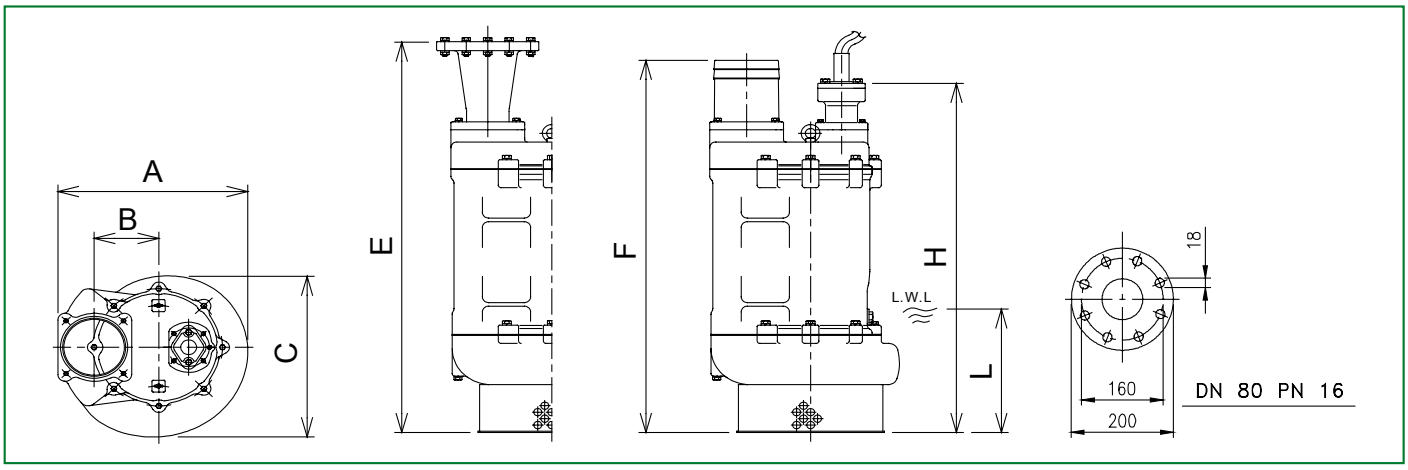

L.W.L. = Lower Water Level

DIMENSIONAL DATA

Type	Cable	Dimensions [mm]							Connection		Solids handling [mm]	Weight [kg]
	[n° x mm²]	A	B	C	E	F	H	L	[mm]	[in]		
TITAN 4GL 55-15	3 x 2	295	122	222	745	725	660	210	80	3”	15	110
TITAN 4GL 80-20	3 x 2	295	122	222	745	725	660	210	80	3”	15	120

TITAN 4GL

SUBMERSIBLE DRAINAGE PUMP
DN 100 - 4” CAST IRON - 1450 rpm

Liquid temperature: 0°C +40°C
Max. ambient temperature: +40°C
(with motor exposed to air)

Power cable: 20 m
Maximum immersion depth: 20 m

Accessories see page 69
Special executions on request

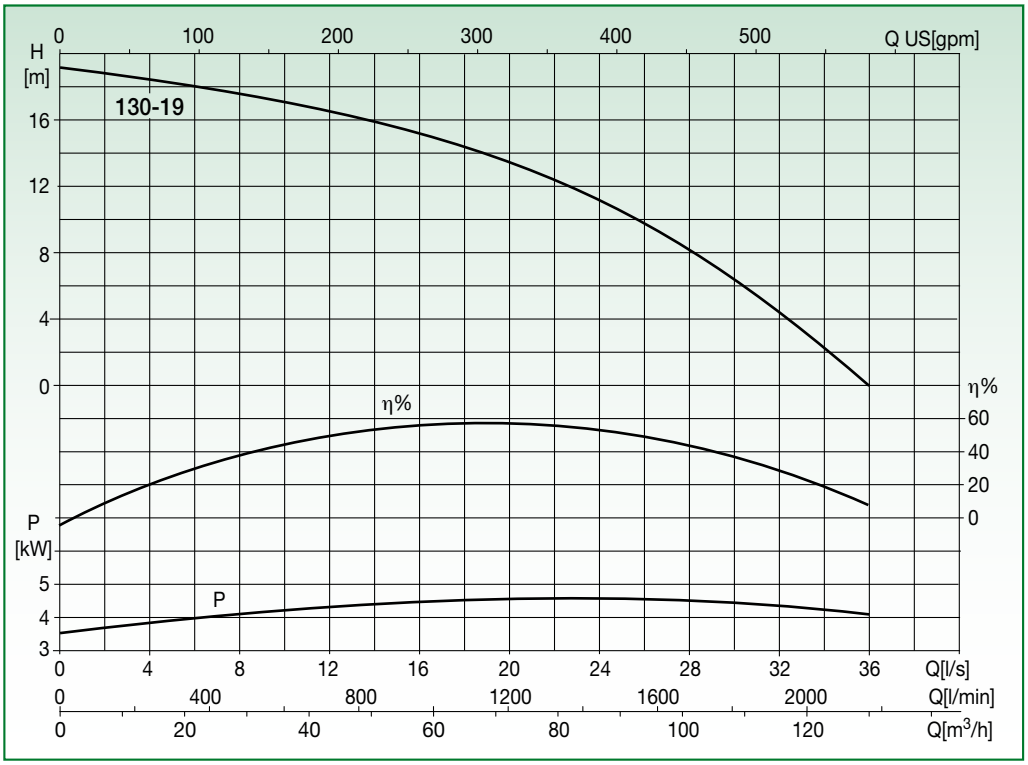

Test to UNI EN ISO 9906 level 2 - Test liquid: water (ρ = 1000 kg/m³, kinematic viscosity ν = 1 mm²/s)
Tolerance on performance curves to UNI EN ISO 9906 Annex A

PERFORMANCE DATA

Code	Type	Motor				Flow rate										
		P_{1n}	P_{2n}	V_n	I_n	[l/s]	0	4	8	12	16	20	24	28	32	34
		[kW]	[kW]	[V]	[A]	[m³/h]	0	14	29	43	58	72	86	101	115	122
10030949	TITAN 4GL 130-19	6,5	5,5	3x400	11,9	H [m]	19	18,4	17,6	16,5	15,2	13,4	11,2	8	4,4	2

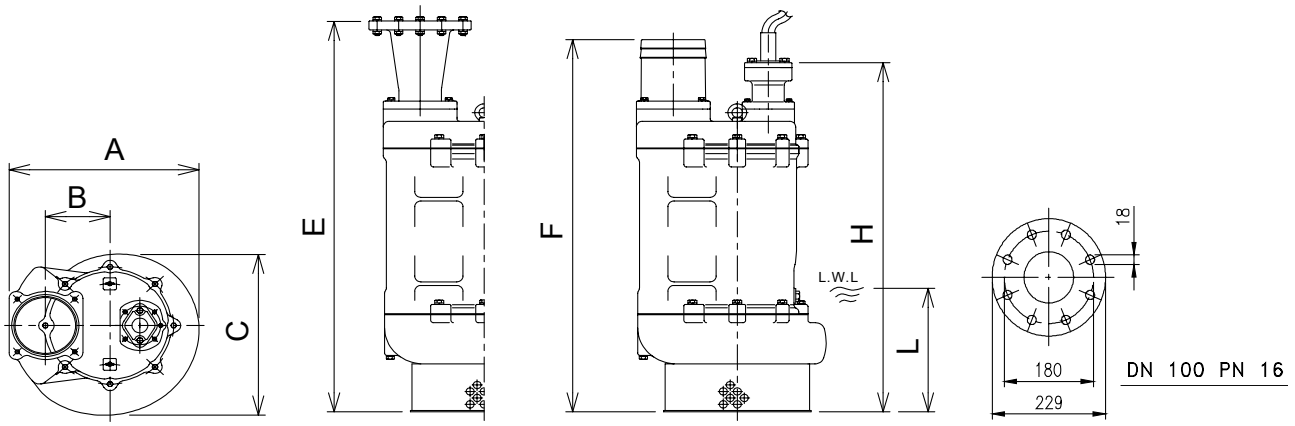

L.W.L. = Lower Water Level

DIMENSIONAL DATA

Type	Cable	Dimensions [mm]							Connection		Solids handling [mm]	Weight [kg]
	[n° x mm²]	A	B	C	E	F	H	L	[mm]	[in]		
TITAN 4GL 130-19	3 x 3,5	362	138	322	795	770	706	230	100	4”	25	135

TITAN 4GL

SUBMERSIBLE DRAINAGE PUMP
DN 150 - 6” CAST IRON - 1450 rpm

Liquid temperature: 0°C +40°C
Max. ambient temperature: +40°C
(with motor exposed to air)

Power cable: 20 m
Maximum immersion depth: 20 m

Accessories see page 69
Special executions on request

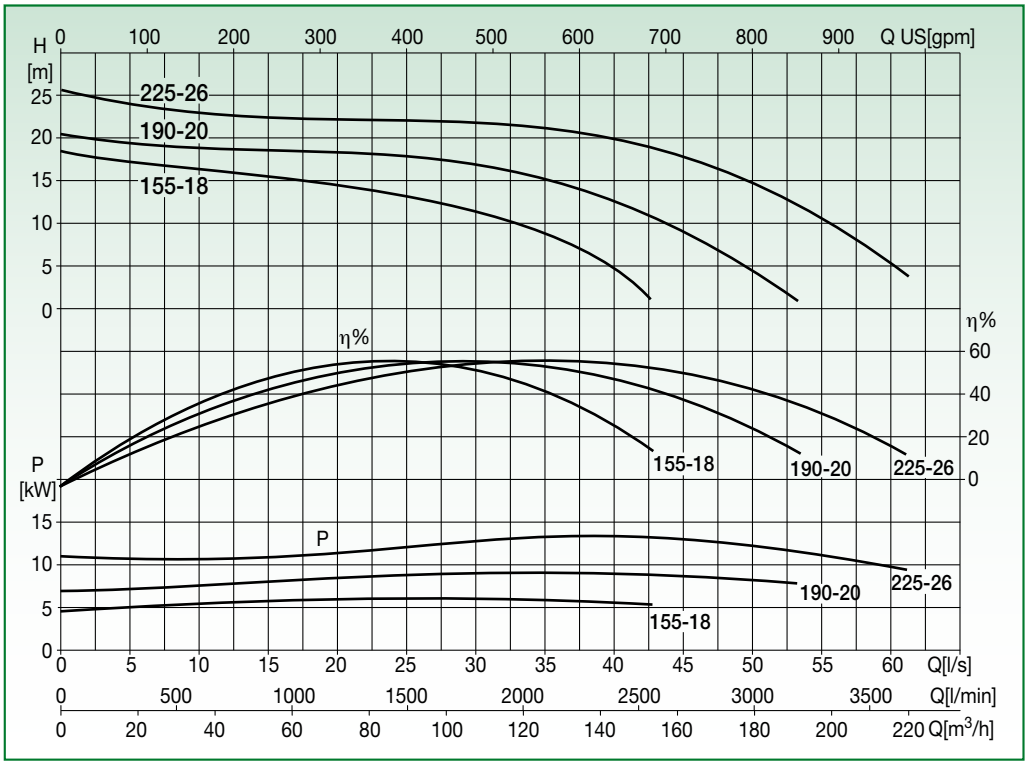

Test to UNI EN ISO 9906 level 2 - Test liquid: water (ρ = 1000 kg/m^3, kinematic viscosity ν = 1 mm^2/s)
Tolerance on performance curves to UNI EN ISO 9906 Annex A

PERFORMANCE DATA

Code	Type	Motor				Flow rate													
		P_{1n}	P_{2n}	V_n	I_n	[l/s]	0	5	10	15	20	25	30	35	40	45	50	55	60
		[kW]	[kW]	[V]	[A]	[m³/h]	0	18	36	54	72	90	108	126	144	162	180	198	216
10030950	TITAN 4GL 155-18	8,7	7,5	3x400	15,8	H [m]	18,5	17,3	16,3	15,5	14,4	13,2	11,3	8,8	4,7				
10030951	TITAN 4GL 190-20	12,2	11	3x400	22		20,5	19,5	18,8	18,5	18,3	17,9	17	15,2	12,5	9	4,4		
10030952	TITAN 4GL 225-26	16,8	15	3x400	30		25,5	24	23	22,5	22,2	22	21,8	21,2	19,9	17,7	14,7	10,5	5,3

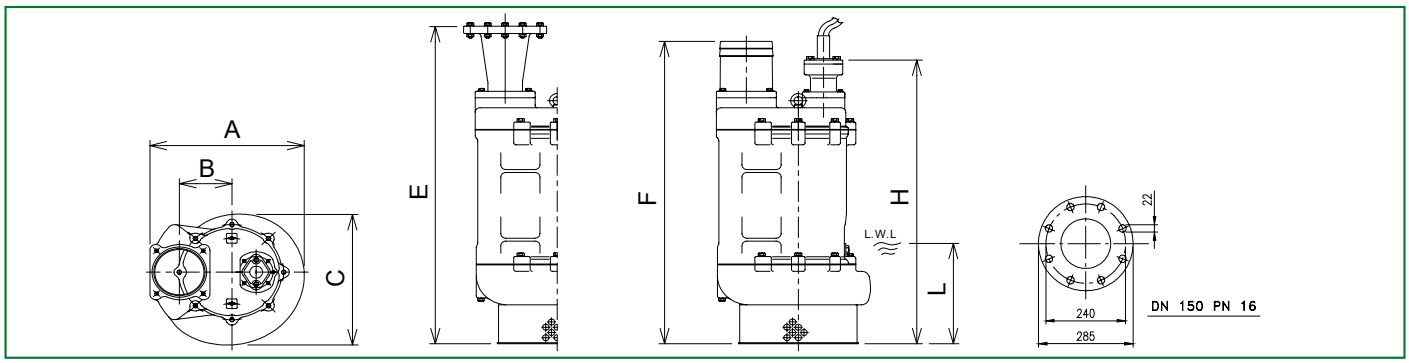

L.W.L. = Lower Water Level

DIMENSIONAL DATA

Type	Cable	Dimensions [mm]							Connection		Solids handling [mm]	Weight [kg]
	[n° x mm²]	A	B	C	E	F	H	L	[mm]	[in]		
TITAN 4GL 155-18	3 x 5,5	428	146	394	920	920	870	250	150	6”	25	210
TITAN 4GL 190-20	3 x 8	428	146	394	920	920	870	250	150	6”	25	220
TITAN 4GL 225-26	3 x 8	428	146	394	955	955	905	250	150	6”	25	245

TITAN 4GL

SUBMERSIBLE DRAINAGE PUMP
DN 200 - 8” CAST IRON - 1450 rpm

Liquid temperature: 0°C +40°C
Max. ambient temperature: +40°C
(with motor exposed to air)

Power cable: 20 m
Maximum immersion depth: 20 m

Accessories see page 69
Special executions on request

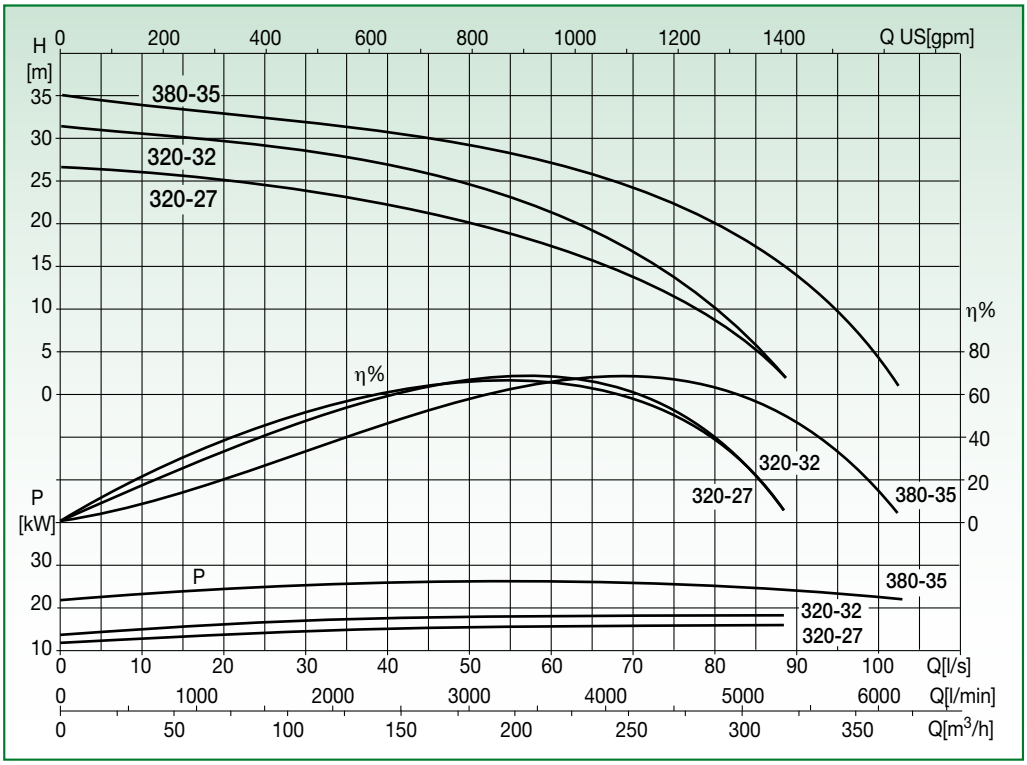

Test to UNI EN ISO 9906 level 2 - Test liquid: water (ρ = 1000 kg/m³, kinematic viscosity ν = 1 mm²/s)
Tolerance on performance curves to UNI EN ISO 9906 Annex A

PERFORMANCE DATA

Code	Type	Motor				Flow rate											
		P_{1n}	P_{2n}	V_n	I_n	[l/s]	0	10	20	30	40	50	60	70	80	90	100
		[kW]	[kW]	[V]	[A]	[m³/h]	0	36	72	108	144	180	216	252	288	324	360
10030954	TITAN 4GL 320-27	22,1	19	3x400	36	H [m]	26,8	26	25	23,8	22,3	20	17,4	13,8	8,6		
10030955	TITAN 4GL 320-32	24,6	22	3x400	42		31,5	30,6	29,8	28,5	27	24,6	21,3	16,8	10		
10030956	TITAN 4GL 380-35	33,2	30	3x400	56		35	34	33	32	30,7	29,3	27	24	20	14	4

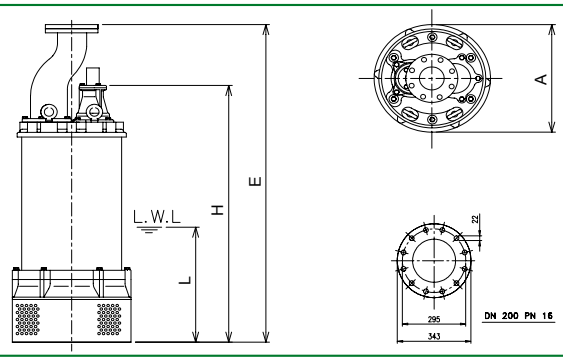

L.W.L. = Lower Water Level

DIMENSIONAL DATA

Type	Cable	Dimensions [mm]				Connection		Solids handling [mm]	Weight [kg]
	[n° x mm²]	A	E	H	L	[mm]	[in]		
TITAN 4GL 320-27	6 x 8	615	1500	1250	500	200	8”	30	420
TITAN 4GL 320-32	6 x 8	615	1500	1250	500	200	8”	30	450
TITAN 4GL 380-35	6 x 14	615	1500	1250	500	200	8”	30	480

SUBMERSIBLE DRAINAGE PUMPS
CAST IRON
TITAN 4GA

Submersible electric pump with steel outer jacket. Open impeller. Wear plate, agitator, and impeller in high chrome hardened steel to ensure high abrasion protection. Motor shaft in AISI 410 stainless steel.

Motor with IP68 protection rating. Standard thermal protection device: internal thermal cutout up to 5.5 kW, bimetal sensor from 7.5 kW.
Triple mechanical oil bath seal with inspectable chamber. Primary and secondary seal in silicon carbide plus lip seal for total protection of the motor. Seal leak protection with electrode as from 11 kW.

Bearings prelubricated with grease.
Maximum pressure head: 38 m w.c.
Connections: 3” ÷ 10” (80 mm ÷ 250 mm)
Maximum immersion depth: 20 m
Liquid temperature: 0 °C +40 °C

TITAN 4GA

SUBMERSIBLE DRAINAGE PUMP
DN 80 - 3” CAST IRON - 1450 rpm

Liquid temperature: 0°C +40°C
Max. ambient temperature: +40°C
(with motor exposed to air)

Power cable: 20 m
Maximum immersion depth: 20 m

Accessories see page 69
Special executions on request

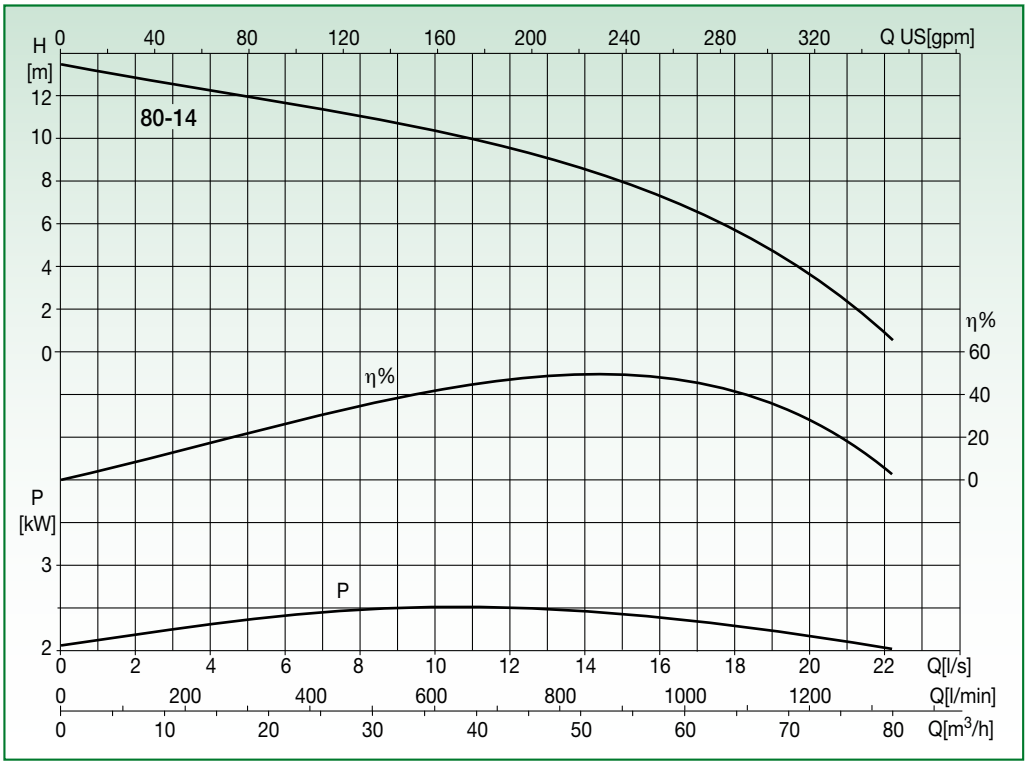

Test to UNI EN ISO 9906 level 2 - Test liquid: water (ρ = 1000 kg/m^3, kinematic viscosity ν = 1 mm^2/s)
Tolerance on performance curves to UNI EN ISO 9906 Annex A

PERFORMANCE DATA

Code	Type	Motor				Flow rate							
		P_{1n}	P_{2n}	V_n	I_n	[l/s]	0	4	8	12	16	20	22
		[kW]	[kW]	[V]	[A]	[m³/h]	0	14	28	43	58	72	79
10030958	TITAN 4GA 80-14	4,4	3,7	3x400	8,1	H [m]	13,5	12,3	11	9,5	7,3	3,6	0,8

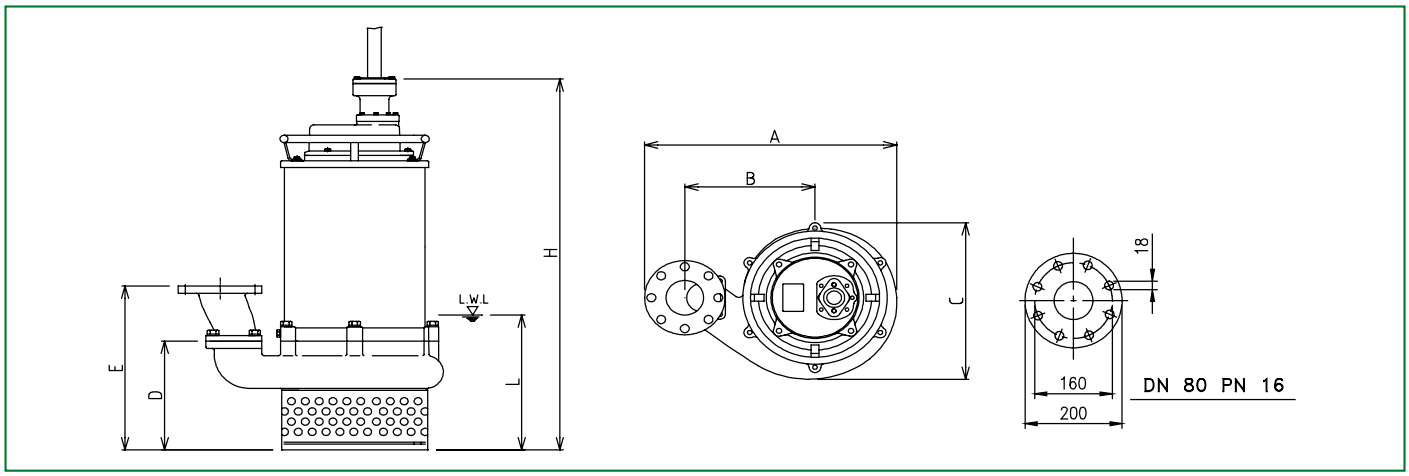

L.W.L. = Lower Water Level

DIMENSIONAL DATA

Type	Cable	Dimensions [mm]							Connection		Solids handling [mm]	Weight [kg]
	[n° x mm²]	A	B	C	D	E	H	L	[mm]	[in]		
TITAN 4GA 80-14	3 x 2	480	255	345	180	325	730	210	80	3”	30	120

TITAN 4GA

SUBMERSIBLE DRAINAGE PUMP
DN 100 - 4” CAST IRON - 1450 rpm

Liquid temperature: 0°C +40°C
Max. ambient temperature: +40°C
(with motor exposed to air)

Power cable: 20 m
Maximum immersion depth: 20 m

Accessories see page 69
Special executions on request

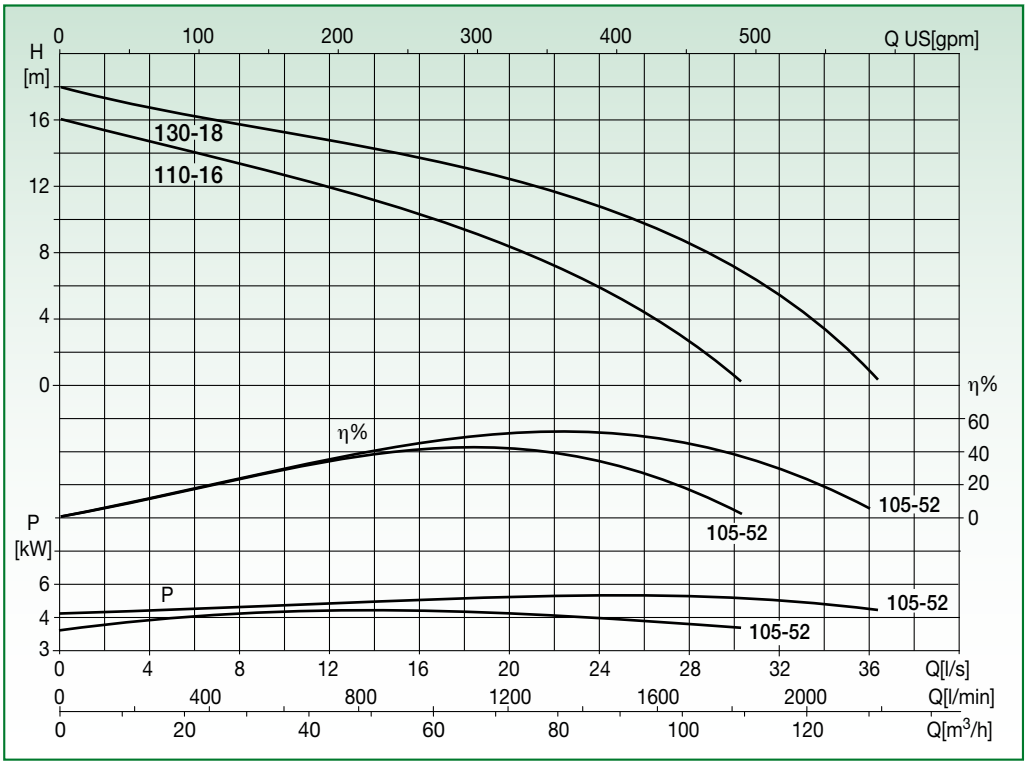

Test to UNI EN ISO 9906 level 2 - Test liquid: water (ρ = 1000 kg/m³, kinematic viscosity ν = 1 mm²/s)
Tolerance on performance curves to UNI EN ISO 9906 Annex A

PERFORMANCE DATA

Code	Type	Motor				Flow rate										
		P_{1n}	P_{2n}	V_n	I_n	[l/s]	0	4	8	12	16	20	24	28	32	36
		[kW]	[kW]	[V]	[A]	[m³/h]	0	14	28	43	58	72	86	101	115	130
10030959	TITAN 4GA 110-16	6,5	5,5	3x400	11,9	H [m]	16	14,7	13,3	12	10,3	8,3	5,8	2,6		
10032991	TITAN 4GA 130-18	8,7	7,5	3x400	15,8		18	16,7	15,7	14,8	13,7	12,4	10,8	8,5	5,5	1

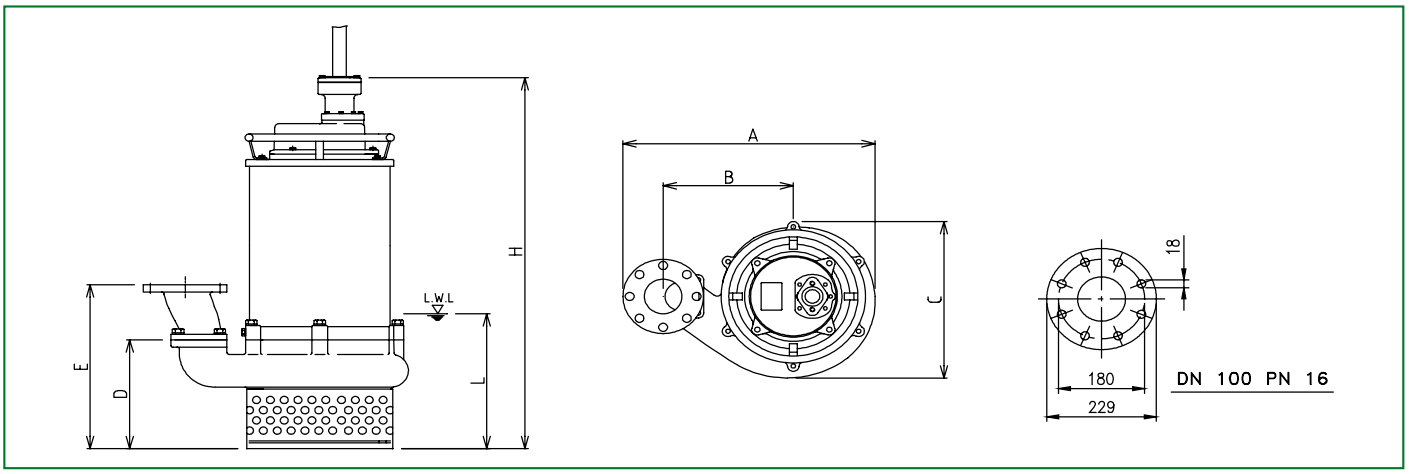

L.W.L. = Lower Water Level

DIMENSIONAL DATA

Type	Cable	Dimensions [mm]							Connection		Solids handling [mm]	Weight [kg]
	[n° x mm²]	A	B	C	D	E	H	L	[mm]	[in]		
TITAN 4GA 110-16	3 x 3,5	525	275	370	246	410	840	255	100	4”	40	150
TITAN 4GA 130-18	3 x 5,5	525	275	370	246	410	840	255	100	4”	40	175

TITAN 4GA

SUBMERSIBLE DRAINAGE PUMP
DN 150 - 6” CAST IRON - 1450 rpm

Liquid temperature: 0°C +40°C
Max. ambient temperature: +40°C
(with motor exposed to air)

Power cable: 20 m
Maximum immersion depth: 20 m

Accessories see page 69
Special executions on request

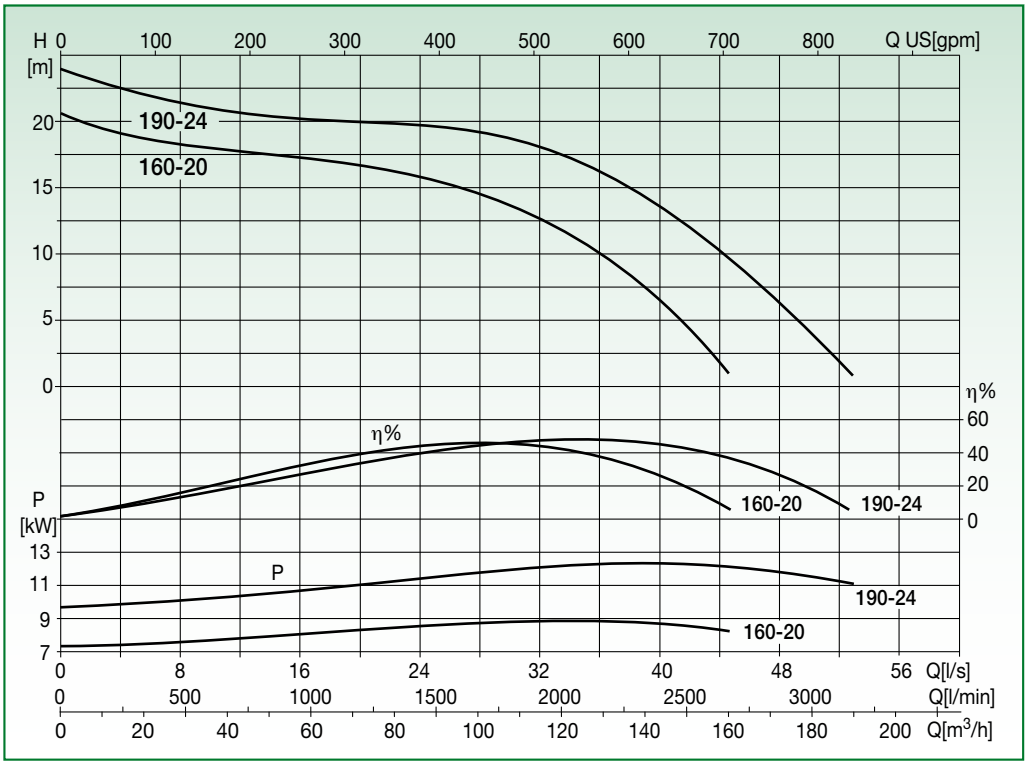

Test to UNI EN ISO 9906 level 2 - Test liquid: water (ρ = 1000 kg/m³, kinematic viscosity ν = 1 mm²/s)
Tolerance on performance curves to UNI EN ISO 9906 Annex A

PERFORMANCE DATA

Code	Type	Motor				Flow rate									
		P_{1n}	P_{2n}	V_n	I_n	[l/s]	0	8	16	24	32	40	44	48	52
		[kW]	[kW]	[V]	[A]	[m³/h]	0	29	58	86	115	144	158	173	187
10032992	TITAN 4GA 160-20	12,2	11	3x400	22	H [m]	20,5	18,3	17,2	15,6	12,6	6,7	1,6		
10032993	TITAN 4GA 190-24	16,8	15	3x400	30		24	21,4	20,2	19,6	18	13,5	10,2	6,3	2

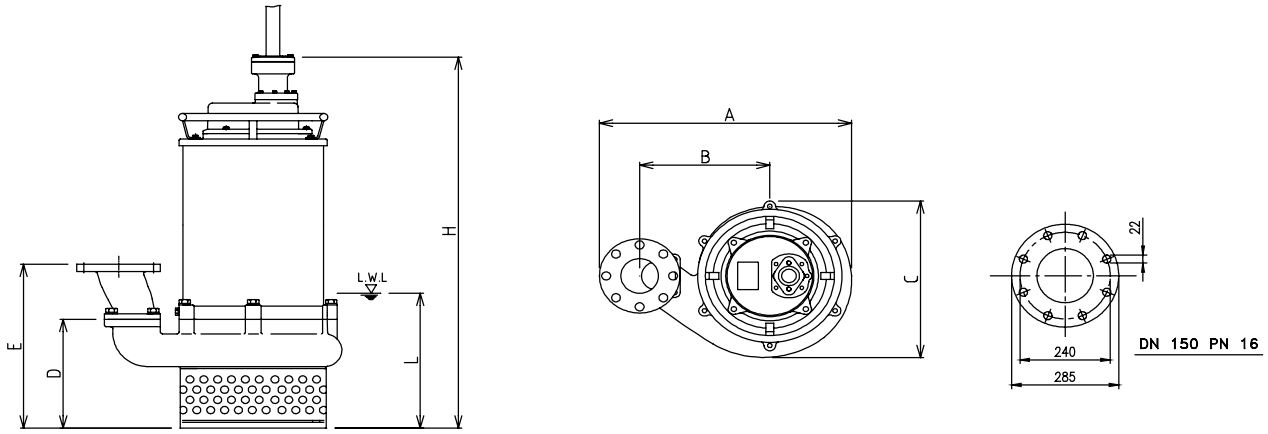

L.W.L. = Lower Water Level

DIMENSIONAL DATA

Type	Cable	Dimensions [mm]							Connection		Solids handling [mm]	Weight [kg]
	[n° x mm²]	A	B	C	D	E	H	L	[mm]	[in]		
TITAN 4GA 160-20	3 x 8	590	290	450	300	440	1000	350	150	6”	50	200
TITAN 4GA 190-24	3 x 8	590	290	450	300	440	1000	350	150	6”	50	230

TITAN 4GA

SUBMERSIBLE DRAINAGE PUMP
DN 200 - 8” CAST IRON - 1450 rpm

Liquid temperature: 0°C +40°C
Max. ambient temperature: +40°C
(with motor exposed to air)

Power cable: 20 m
Maximum immersion depth: 20 m

Accessories see page 69
Special executions on request

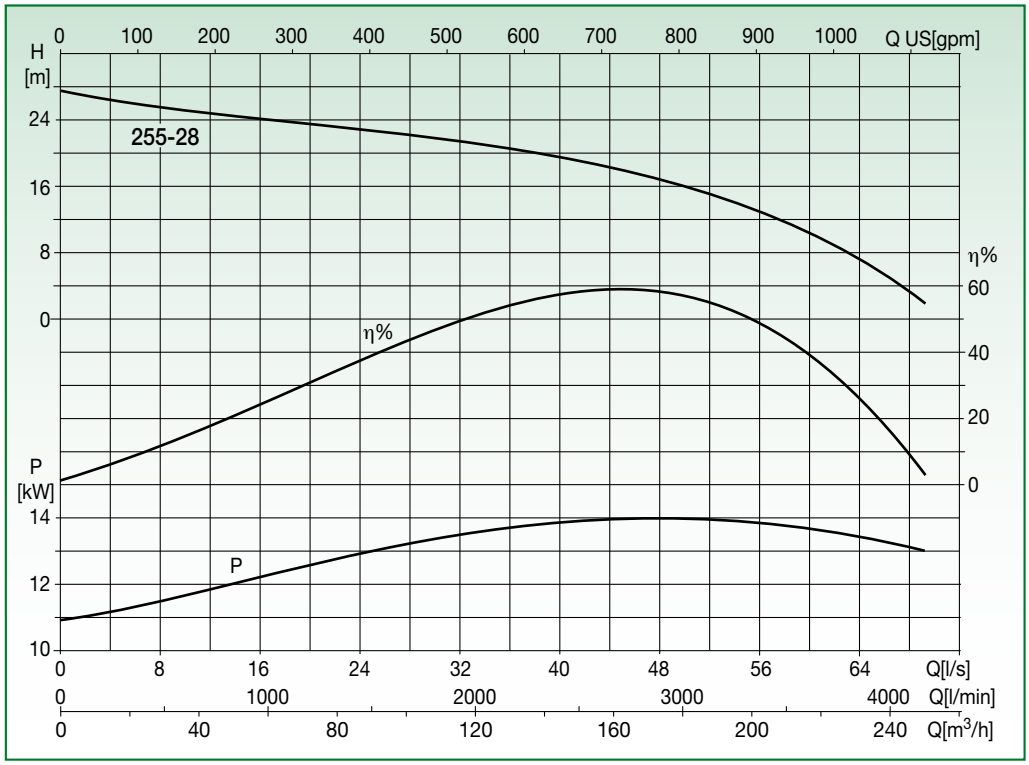

Test to UNI EN ISO 9906 level 2 - Test liquid: water (ρ = 1000 kg/m³, kinematic viscosity ν = 1 mm²/s)
Tolerance on performance curves to UNI EN ISO 9906 Annex A

PERFORMANCE DATA

Code	Type	Motor				Flow rate										
		P_{1n}	P_{2n}	V_n	I_n	[l/s]	0	8	16	24	32	40	48	56	64	68
		[kW]	[kW]	[V]	[A]	[m³/h]	0	29	58	86	115	144	173	202	243	245
10032994	TITAN 4GA 255-28	22,1	19	3x400	36	H [m]	27,5	25,4	24	22,8	21,4	19,5	16,7	12,8	7	3,2

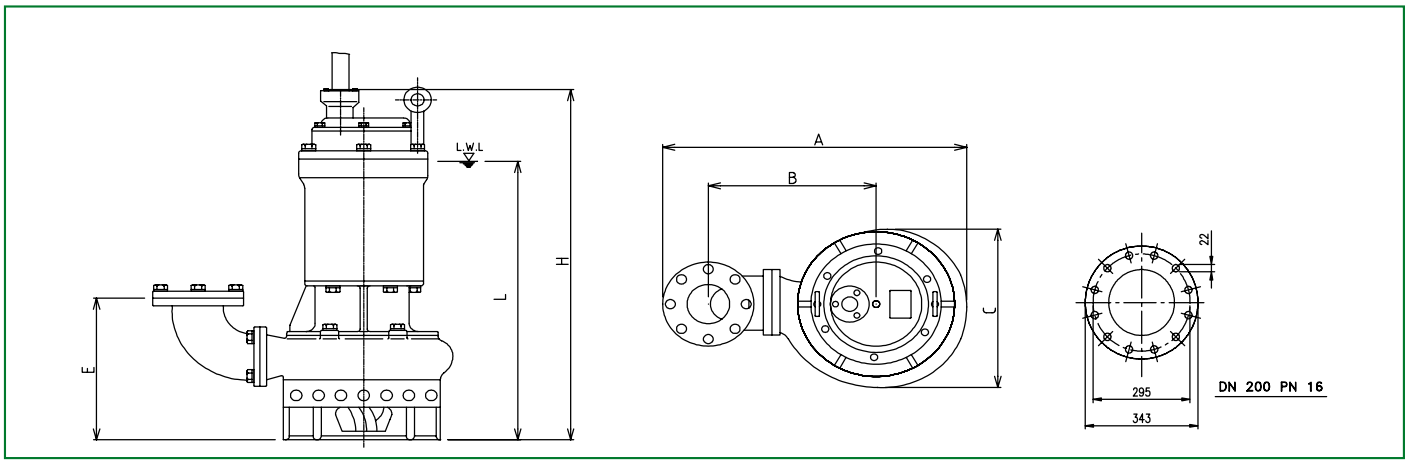

L.W.L. = Lower Water Level

DIMENSIONAL DATA

Type	Cable	Dimensions [mm]						Connection		Solids handling [mm]	Weight [kg]
	[n° x mm²]	A	B	C	E	H	L	[mm]	[in]		
TITAN 4GA 255-28	6 x 8	990	500	580	575	1250	1000	200	8”	50	580

TITAN 4GA

SUBMERSIBLE DRAINAGE PUMP
DN 250 - 10” CAST IRON - 1450 rpm

Liquid temperature: 0°C +40°C
Max. ambient temperature: +40°C
(with motor exposed to air)

Power cable: 20 m
Maximum immersion depth: 20 m

Accessories see page 69
Special executions on request

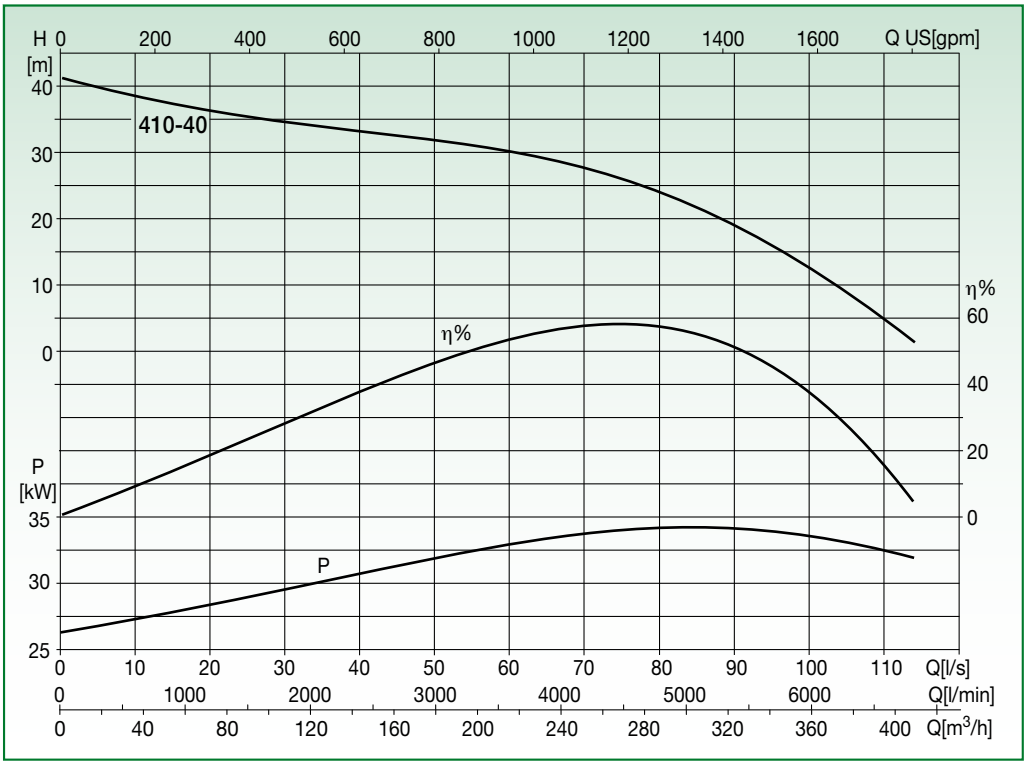

Test to UNI EN ISO 9906 level 2 - Test liquid: water (ρ = 1000 kg/m^3, kinematic viscosity ν = 1 mm^2/s)
Tolerance on performance curves to UNI EN ISO 9906 Annex A

PERFORMANCE DATA

Code	Type	Motor				Flow rate							
		P_{1n}	P_{2n}	V_n	I_n	[l/s]	0	20	40	60	80	100	111
		[kW]	[kW]	[V]	[A]	[m³/h]	0	72	144	216	288	360	400
10032995	TITAN 4GA 410-40	49,7	45	3x400	87	H [m]	41	36,4	33,2	30	24	12,4	3,4

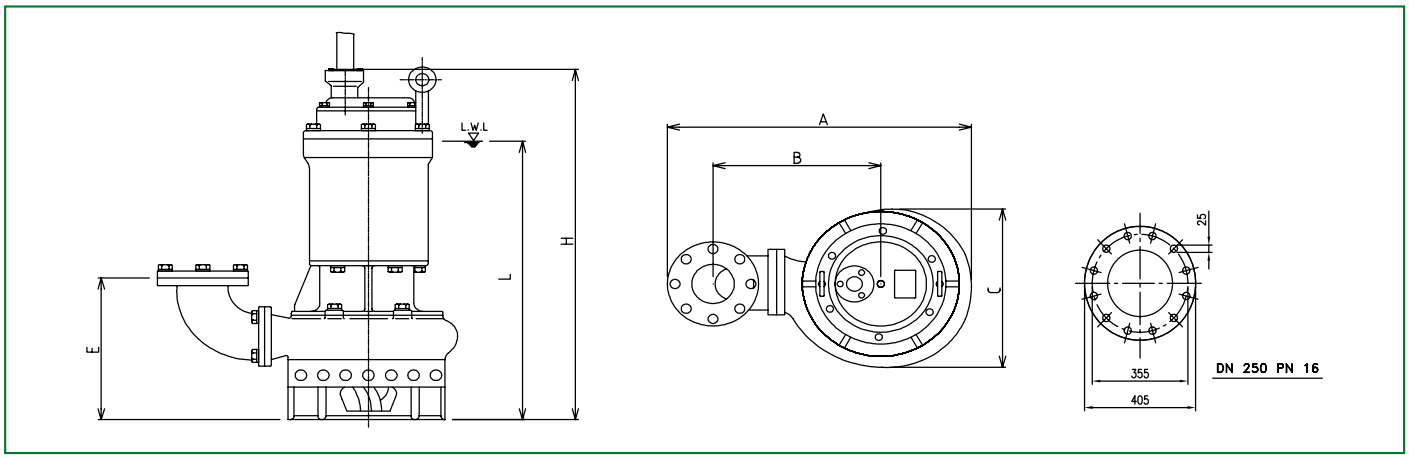

L.W.L. = Lower Water Level

DIMENSIONAL DATA

Type	Cable	Dimensions [mm]						Connection		Solids handling [mm]	Weight [kg]
	[n° x mm²]	A	B	C	E	H	L	[mm]	[in]		
TITAN 4GA 410-40	6 x 22	1100	630	700	600	1620	1300	250	10”	75	930

ACCESSORIES

Control panel

The control panel makes it possible to exploit the protection devices installed in the pump to the full, providing an immediate indication of any operating anomalies. An electrical connection in compliance with regulations is essential in relation to workplace safety. Varisco can supply control panels developed specifically for its submersible pumps in "base" and "top" versions.

"BASE" version control panel characteristics

Mains power supply: 400V, 50 Hz
Metal frame, protection rating IP55
Direct starting up to 7.5 kW inclusive, reactor starting for higher power units
Emergency stop pushbutton
Standard thermal protection for electric motors
Electric motor thermal cutout trip protection
Manual operation (selector) and automatic operation (start/stop signals from two floats)
Indicator lights on control panel: mains, pump run, pump shutdown, alarm (cutout trip)

Code	Description
10033947	CP TITAN - 1,5
10032581	CP TITAN - 2,2
10032263	CP TITAN - 3,7
10033193	CP TITAN - 5,5
10033192	CP TITAN - 7,5
10032721	CP TITAN - 11
10033876	CP TITAN - 15
10039862	CP TITAN - 19
10037288	CP TITAN - 22
10039863	CP TITAN - 30
10034053	CP TITAN - 37
10040261	CP TITAN - 45

"TOP" version control panel characteristics

Mains power supply: 400V, 50 Hz
Metal frame, protection rating IP55
Direct starting up to 7.5 kW inclusive, reactor starting for higher power units
Emergency stop pushbutton
Standard thermal protection for electric motors
Electric motor thermal cutout trip protection
Protected against water inlet in seal chamber (from 11 kW and higher)
Manual operation (START/STOP pushbuttons) and automatic operation (start/stop signals from two floats)
Indicator lights on control panel: mains, pump run, pump shutdown, alarm (thermal cutout trip / water leakage in seal chamber)
IEC 60309 standard 3P+E plug for connection to 400V line
Line ammeter

Code	Description
On request	CP TITAN - 1,5 TOP
	CP TITAN - 2,2 TOP
	CP TITAN - 3,7 TOP
	CP TITAN - 5,5 TOP
10031406	CP TITAN - 7,5 TOP
On request	CP TITAN - 11 TOP
	CP TITAN - 15 TOP
	CP TITAN - 19 TOP
10032801	CP TITAN - 22 TOP
On request	CP TITAN - 30 TOP
	CP TITAN - 37 TOP
	CP TITAN - 45 TOP

Flow switch

Silver contacts
Contact rating 16 (4) A at 250Vac
Microswitch: 1 changeover contact
Thermoplastic enclosure
Maximum temperature: 40°C
Protection rating IP 67
Counterweight

Code	Description
10024961	**FLOAT TITAN - 10**
10037471	**FLOAT TITAN - 20**

Flexible discarge hose

Code	Description
10012919	**FLAT HOSE - 50**
-	**FLAT HOSE - 75**
10012921	**FLAT HOSE - 80**
10012922	**FLAT HOSE - 100**

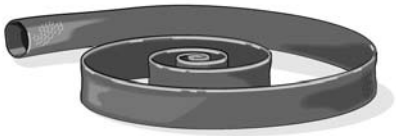

TITAN 2A ACCESSORIES

Zinc anodes kit for cathodic protection

Cathode protection with zinc anodes for handling salt solutions or brackish waters and to protect against galvanic corrosion. The lifetime of the anodes must be estimated in accordance with the salt concentration, the temperature, and the flow rate of the pumped liquid, considering also the possible presence of abrasive particles.

Code	Description	Pumps
-	KIT ANODI ZINCO TITAN 2A - 1	TITAN 2AL 30-15
		TITAN 2AL 30-17
		TITAN 2AL 40-18
		TITAN 2AL 40-19
		TITAN 2AM 90-25
-	KIT ANODI ZINCO TITAN 2A - 2	TITAN 2AL 60-20
		TITAN 2AM 30-35
-	KIT ANODI ZINCO TITAN 2A - 3	TITAN 2AM 130-30
		TITAN 2AH 70-45
		TITAN 2AL 200-20
		TITAN 2AM 150-45
		TITAN 2AH 50-70
		TITAN 2AL 240-25
-	KIT ANODI ZINCO TITAN 2A - 4	TITAN 2AM 360-30
		TITAN 2AH 130-75

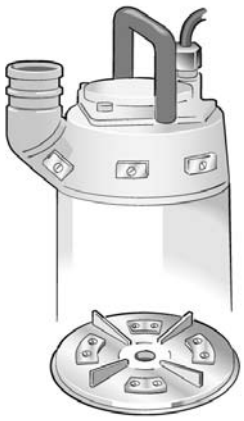

Female threaded quick coupling (Storz)

Code	Description
-	GIUNTO RAPIDO TITAN 2A - 2"/C ST FF
-	GIUNTO RAPIDO TITAN 2A - 3"/B ST FF
-	GIUNTO RAPIDO TITAN 2A - 4"/A ST FF
-	GIUNTO RAPIDO TITAN 2A - 6"/F ST FF

ST : Storz quick coupling - FF : threaded female connection

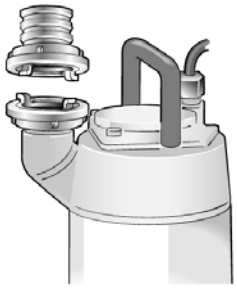

Quick coupling (Storz) with hose connection

Code	Description
-	GIUNTO RAPIDO TITAN 2A - 2"/C ST PG
-	GIUNTO RAPIDO TITAN 2A - 3"/B ST PG
-	GIUNTO RAPIDO TITAN 2A - 4"/A ST PG
-	GIUNTO RAPIDO TITAN 2A - 6"/F ST PG

ST : Storz quick coupling - PG : hose connection

Suction strainer for total emptying

Replacement of the standard bottom plate with the “bottom suction adapter” makes it possible to reduce the minimum suction level to just a few millimetres. This accessory makes it possible to dry out floor surfaces, sumps and tanks completely.

Code	Description	Pumps
-	FILTRO PAVIMENTO TITAN 2A - 1	TITAN 2AL 30-15
		TITAN 2AL 30-17
		TITAN 2AL 40-18
		TITAN 2AL 40-19
-	FILTRO PAVIMENTO TITAN 2A - 2	TITAN 2AL 70-18
		TITAN 2AM 50-25

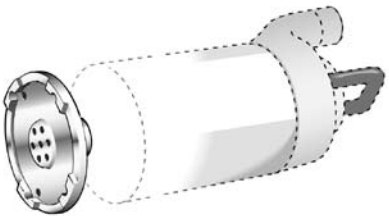

Adapters for series connection

Replacement of the standard bottom plate with the adapter for series connections in order to connect two or more pumps together in line. This effectively results in a multiple stage pumping system that makes it possible to obtain high discharge pressure heads.

Code	Description	Pumps
-	CONNESSIONE SERIE TITAN 2A - 2” - 1	TITAN 2AL 30-15
		TITAN 2AL 30-17
		TITAN 2AL 40-18
		TITAN 2AL 40-19
-	CONNESSIONE SERIE TITAN 2A - 3” - 1	TITAN 2AL 70-18
		TITAN 2AM 50-25
	CONNESSIONE SERIE TITAN 2A - 3” - 2	TITAN 2AM 90-25
-	CONNESSIONE SERIE TITAN 2A - 3” - 3	TITAN 2AM 130-30
	CONNESSIONE SERIE TITAN 2A - 4” - 1	TITAN 2AH 70-45
		TITAN 2AL 200-20
-	CONNESSIONE SERIE TITAN 2A - 3” - 4	TITAN 2AM 150-45
	CONNESSIONE SERIE TITAN 2A - 4” -2	TITAN 2AH 50-70
	CONNESSIONE SERIE TITAN 2A - 6” -1	TITAN 2AL 240-25
-	CONNESSIONE SERIE TITAN 2A - 3” - 1	TITAN 2AH 50-70
	CONNESSIONE SERIE TITAN 2A - 4” PG	TITAN 2AM 360-30
	CONNESSIONE SERIE TITAN 2A - 6” PG	TITAN 2AH 130-75

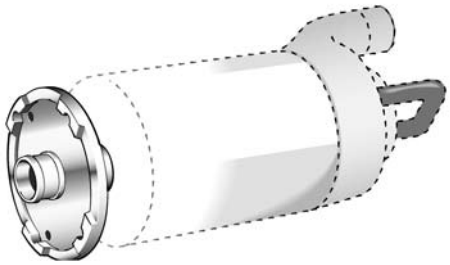

Discharge connections

Code	Description	Pumps
-	CURVA MANDATA TITAN 2A - 2" PG - 1	TITAN 2AL 30-15 TITAN 2AL 30-17 TITAN 2AL 40-18 TITAN 2AL 40-19
-	CURVA MANDATA TITAN 2A - 2"1/2 PG - 1	
	CURVA MANDATA TITAN 2A - 3" PG -1	
	CURVA MANDATA TITAN 2A - 2" FM	
-	CURVA MANDATA TITAN 2A - 2"1/2 FM -1	
	CURVA MANDATA TITAN 2A - 3" FM	
	CURVA MANDATA TITAN 2A - 2"/C ST - 1	
-	CURVA MANDATA TITAN 2A - 2"1/2 PG - 2	TITAN 2AL 70-18 TITAN 2AM 50-25 TITAN 2AM 90-25
	CURVA MANDATA TITAN 2A - 3" PG - 2	
	CURVA MANDATA TITAN 2A - 4" PG - 1	
-	CURVA MANDATA TITAN 2A - 2"1/2 FM - 2	
	CURVA MANDATA TITAN 2A - 4" FM	
	CURVA MANDATA TITAN 2A - 3"/B ST - 1	
-	CURVA MANDATA TITAN 2A - 4"/A ST - 1	
	CURVA MANDATA TITAN 2A - 2" PG - 2	TITAN 2AL 60-20 TITAN 2AM 30-35
	CURVA MANDATA TITAN 2A - 3" PG - 3	
	CURVA MANDATA TITAN 2A - 2"/C ST - 2	
	CURVA MANDATA TITAN 2A - 3"/B ST - 2	
	CURVA MANDATA TITAN 2A - 3" PG - 4	TITAN 2AM 130-30 TITAN 2AH 70-45 TITAN 2AL 200-20 TITAN 2AM 150-45 TITAN 2AH 50-70 TITAN 2AL 240-25
	CURVA MANDATA TITAN 2A - 4" PG - 2	
	CURVA MANDATA TITAN 2A - 6" PG - 1	
	CURVA MANDATA TITAN 2A - 3"/B ST - 3	
	CURVA MANDATA TITAN 2A - 4"/A ST - 2	
	CURVA MANDATA TITAN 2A - 6"/F ST - 1	
	CURVA MANDATA TITAN 2A - 4" PG - 3	TITAN 2AM 360-30 TITAN 2AH 130-75
	CURVA MANDATA TITAN 2A - 6" PG - 2	
	CURVA MANDATA TITAN 2A - 8" PG	
	CURVA MANDATA TITAN 2A - 8" FM	
	CURVA MANDATA TITAN 2A - 4"/A ST - 3	
	CURVA MANDATA TITAN 2A - 6"/F ST - 2	

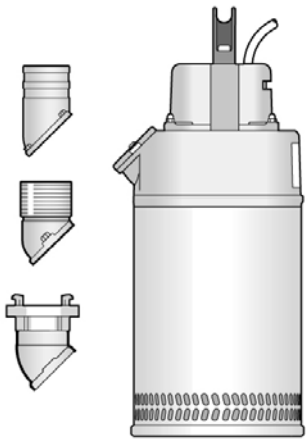

PG : hose connection - FM : male threaded connection - ST : Storz quick coupling

Storz Wrench

Code	Description
-	CHIAVE TITAN 2A - 2/3/4" A/B/C ST
-	CHIAVE TITAN 2A - 6"/F ST

ST : Storz quick coupling

Soft starter

Electric starting device that drastically reduces starting current (50-60% less than in the case of direct starting) and makes it possible to avoid sudden voltage dips on the mains network, thus extending the working of various components. The soft starter also eliminates pressure hammer effects by allowing the pump to decelerate gradually, and it ensures the correct direction of rotation of the impeller.

Connection device in the pump head:

Code	Description	Pumps
-	SOFT STARTER TITAN 2A - P1	TITAN 2AM 130-30
		TITAN 2AH 70-45
		TITAN 2AL 200-20
-	SOFT STARTER TITAN 2A - P2	TITAN 2AM 150-45
		TITAN 2AH 50-70
		TITAN 2AL 240-25
-	SOFT STARTER TITAN 2A - P3	TITAN 2AM 360-30
		TITAN 2AH 130-75

Device for connection in the external control panel:

Code	Description	Pumps
-	SOFT STARTER TITAN 2A - Q1	TITAN 2AM 130-30
		TITAN 2AH 70-45
		TITAN 2AL 200-20
-	SOFT STARTER TITAN 2A - Q2	TITAN 2AM 150-45
		TITAN 2AH 50-70
		TITAN 2AL 240-25
-	SOFT STARTER TITAN 2A - Q3	TITAN 2AM 360-30
		TITAN 2AH 130-75

Safe drive

Electronic safety device that stops the pump if one of the power feeding phases is lost. When the phase sequence is incorrect (impeller direction of rotation would be inverted) starting of the pump is inhibited. The device also inhibits automatic pump restart following a thermal cutout trip: In this case the pump must be reset manually by disconnecting it from the electrical mains supply and then reconnecting it.

Code	Description	Pumps
-	SAFE DRIVE TITAN 2A - 400V - 1	TITAN 2AL 70-18
		TITAN 2AM 50-25
		TITAN 2AM 130-30
		TITAN 2AH 70-45
		TITAN 2AL 200-20
		TITAN 2AM 150-45
		TITAN 2AH 50-70
		TITAN 2AL 240-25
-	SAFE DRIVE TITAN 2A - 230V - 1 SAFE DRIVE TITAN 2A - 400V - 2	TITAN 2AM 90-25
-	SAFE DRIVE TITAN 2A - 230V - 2 SAFE DRIVE TITAN 2A - 400V - 3	TITAN 2AM 360-30
		TITAN 2AH 130-75

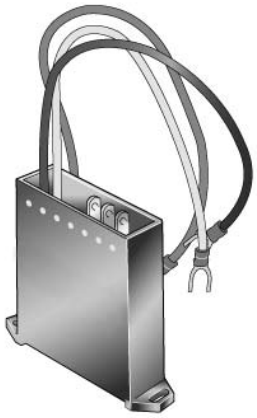

Polyurethane coated diffuser

Diffuser and wear parts coating in polyurethane for highly abrasive applications.

Code	Description	Pumps
-	DRP TITAN 2A -1	TITAN 2AL 70-18
		TITAN 2AM 50-25
		TITAN 2AM 90-25
-	DRP TITAN 2A -2	TITAN 2AM 130-30
		TITAN 2AH 70-45
		TITAN 2AM 150-45
-	DRP TITAN 2A -3	TITAN 2AH 130-75

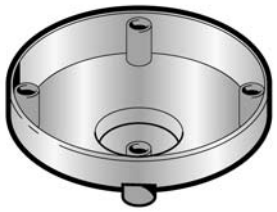

GENERAL TERMS OF SALE

ORDERS
Placing of orders for products or services implies that the purchaser accepts the present general terms of sale unconditionally and waives any claim to the application of the purchaser's own general terms of purchase.

OFFERS AND DOCUMENTS
The offers issued by our agents or auxiliary personnel shall not be binding on our company until we have issued written confirmation of acceptance. Our catalogues, tables and other technical literature are supplied purely on a guideline basis.

PRICES AND TERMS OF DELIVERY
Except in the presence of our written derogation, our prices are taken from the price list in force at the time of the order, quoted net and for cash payment, net of VAT, for unpacked products, delivered ex works Varisco SpA – Padua, on the agreed date. Delivery dates are guideline and imply that we pledge to use our best efforts rather than constituting a guarantee of delivery. The terms are enforced from the date of order confirmation. If said terms are exceeded this shall not authorise the purchaser to cancel the order nor to demand any form of indemnity, compensation, or payment of interest. We reserve the right to make partial deliveries. In the case of shipment, the goods travel at the expense, risk and responsibility of the assignee, even if the contractual terms specify carriage paid terms.

PAYMENT
Unless otherwise indicated by our company, all our invoices must be paid in cash at our Padua headquarters, net of all expenses and without discounts. Any queries in relation to invoices and debit notes must be sent to our offices no later than 8 days after the invoice date. Once this term has elapsed the relative invoice will be construed as having been irrevocably accepted.
No withholding amounts or deductions are permitted, even in the case of ongoing claims and irrespective of the reason for such claims.
We reserve the right to suspend deliveries and terminate the contract of sale if we should receive information such as to induce uncertainty of the solvency of the purchaser and in all cases in which the purchaser delays the settlement of even a single instalment of the agreed payment of the amounts due to our company for any whatsoever title, without any obligation on our part to place the purchaser in default. In the event of late payments the purchaser will automatically lose its entitlement to any extended payment terms and the outstanding amounts will become due immediately without notice of default, with interest at the annual rate of the Central European Bank increased by seven percentage points, without prejudice to our entitlement to claim other and higher amounts due to our company.

RETENTION OF OWNERSHIP
Our company retains ownership of the goods supplied until the relative payment has been settled in full. Notwithstanding this clause, the purchaser will sustain all risks relative to the goods from the time of delivery, and therefore in the event of loss or destruction of the goods the purchaser will still be obliged to pay the agreed price in full. If any third party attempts to claim title to the goods in question the purchaser undertakes to inform our company of this situation immediately.

CLAIMS
Under penalty of forfeiture, any claims for differences or shortages of the goods must be made immediately to the shipping agent in the transport document and notified to our company in writing no later than eight days from the date of receipt of the products or, if relative to defects that are not evident by means of careful and diligent inspection at the time of reception of the goods, within the term of eight days from the time of discovery. No returns are accepted unless previously authorised in writing.

WARRANTY
All our products are guaranteed for 12 months from the date of commissioning and anyway for no more than 18 months from the date of delivery. Repairs carried out under warranty shall not affect the natural expiry of the warranty. The warranty covers defective materials or workmanship such that impair the proper operation of the product and make the product unfit for the use for which it is intended, provided such defects are reported promptly and no later than 2 days after they become evident. The warranty expressly excludes all damage deriving from the physical / chemical characteristics of the conveyed fluid and also damage of parts that, due to their nature or function, are subject to wear and deterioration (seals, diaphragms, vacuum and pressure valves, rubber and plastic parts), or defects that are caused by the inobservance of our operating and maintenance instructions, by negligent or inadequate use of storage of the product, or by modifications or repairs made by personnel who have not been expressly authorised by our company. Impossibility to identify the serial number of the product will automatically invalidate the warranty. Our warranty coverage is provided strictly on the condition that the purchaser observes all its obligations up to the date of the claim and the obligations that arise during our warranty intervention. The decision of whether to issue a credit note, repair the product, or replace it, will be taken at our sole discretion. Returns of goods are accepted only when such action has been authorised by our company in writing beforehand, with the goods shipped carriage paid to Varisco SpA - Padua. All expenses for dismantling/reassembly of the product at its place of installation and all other worksite interventions shall be borne entirely by the purchaser. Repaired or replacement products will be returned to the purchaser ex works Varisco SpA - Padua. Our company assumes ownership of the original products once they have been replaced. The foregoing warranty covers and replaces all statutory guarantees or responsibilities and waives any additional responsibility claimed of our company (compensation for damages, loss of earnings, recall campaigns, purchasers labour costs, worksite stoppages, reduction of sale price, etc.)

JURISDICTION
Sole jurisdiction is assigned to the Law Court of Padua, although we reserve the right to bring any disputes before the competent judicial authorities at the domicile of the purchaser if we deem this action to be appropriate.

NOTES

D - 0810 Rev. 01 - E - 1000 cod. 70009

VARISCO S.p.A.
Terza Strada, 9 - Z.I. Nord - 35129 PADOVA - Italy
Tel. +39 049 82 94 111 - Fax +39 049 82 94 373
www.variscospa.com

International sales: Tel. +39 049 82 94 111
Fax +39 049 80 76 762
export@variscospa.com

VARISCO USA, Inc.
706 W. Landstreet Rd
Orlando, FL 32824
Tel. 001 407 826 9039
Fax 001 407 826 9040
info@variscousa.com
www.variscousa.com